RADIONETTE

SM 240 G-FM

ILLUSTRERT DELELISTE

ILLUSTRATED PARTS LIST

Innhold

Sjassisdeler..... 2,3
Tunerdel..... 4,5
Tryktkretsplater..... 4,5
Elektriske deler.....6,7,8
Hovedskjema..... 9
Hovedplate.....10
FM tuner.....11

Ved alle henvendelser, vennligst oppgi apparatets type og nummer.
Ved bestilling av deler, oppgi bestillingsnummer og beskrivelse.

Contents

Chassis assembly.....2,3
Tuner assembly..... 4,5
Printed circuit boards.....4,5
Electrical parts.....6,7,8
Main circuit diagram..... 9
Main board 10
FM tuner.....11

For all enquiries, please state the set´s type and number.
When ordering, give the part´s order number and description .

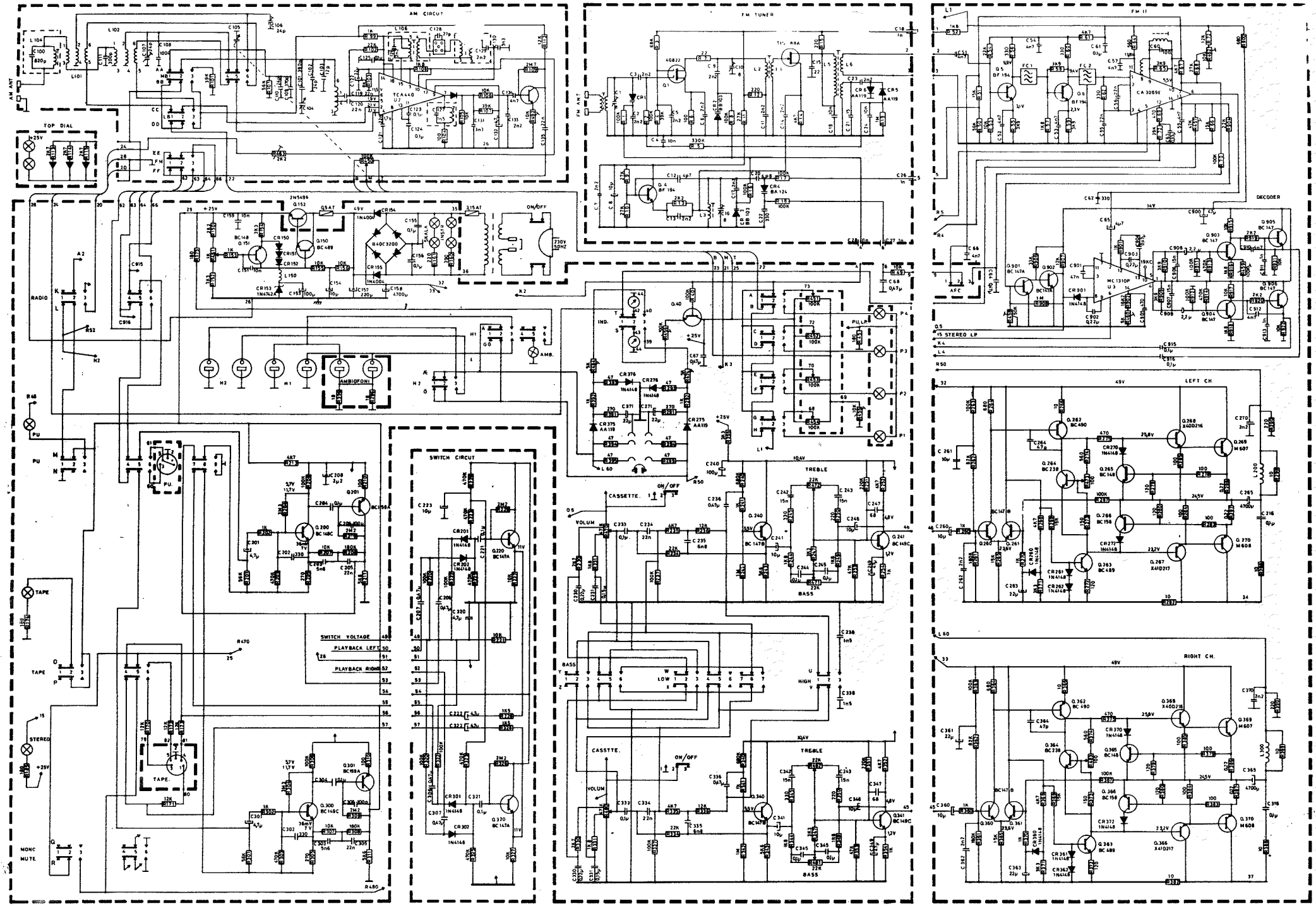

Foreløpig skjema RADIONETTE SM 240C

0176154 Part nr. 354497

Foreløpig skjema RADIONETTE SM 240C

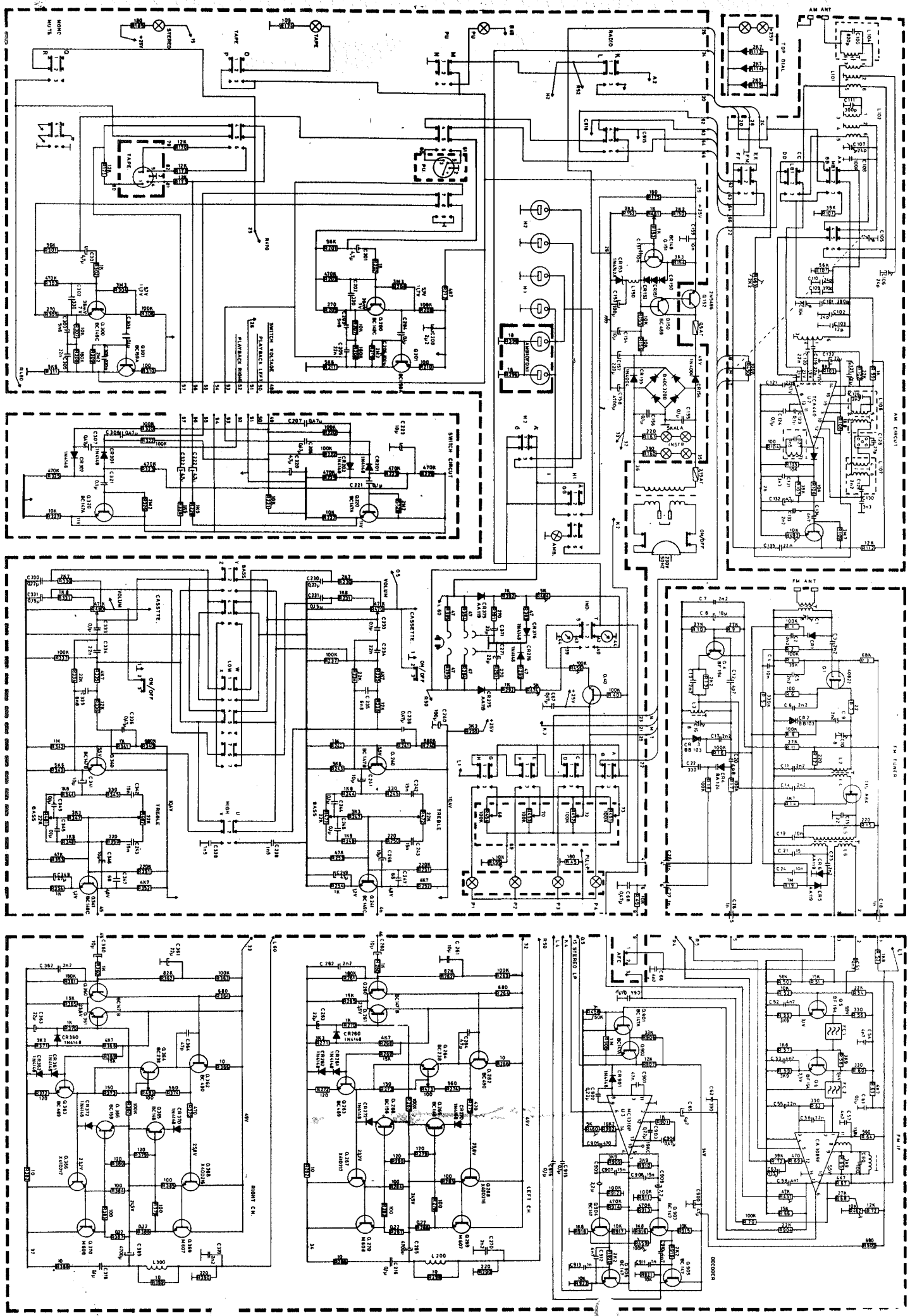

0176154 Part nr. 354497

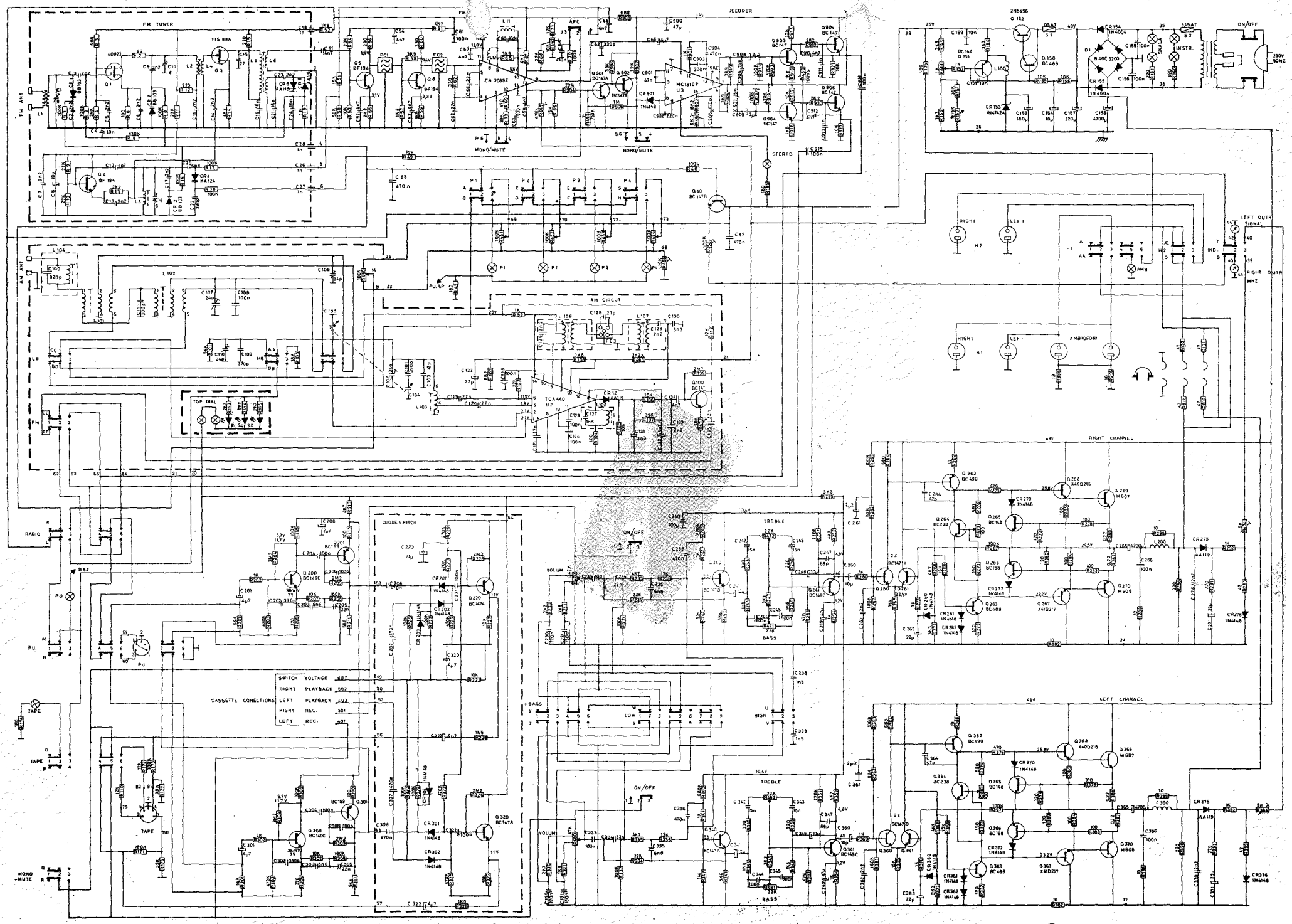

0576154 Part nr. 354497

RADIONETTE SM 240C RADIODELEN

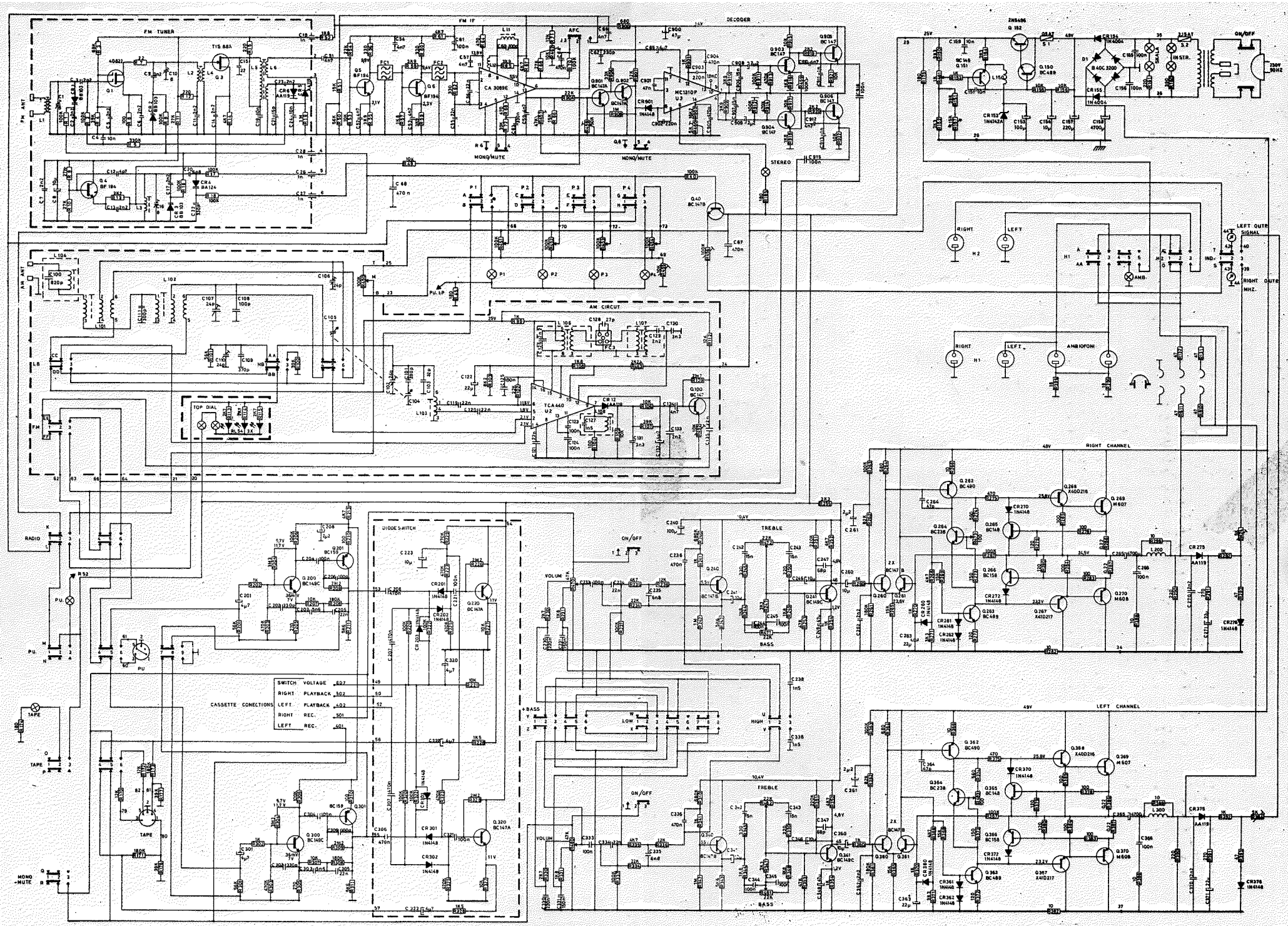

0576154 Part nr. 354497

RADIONETTE SM 240C RADIODELEN

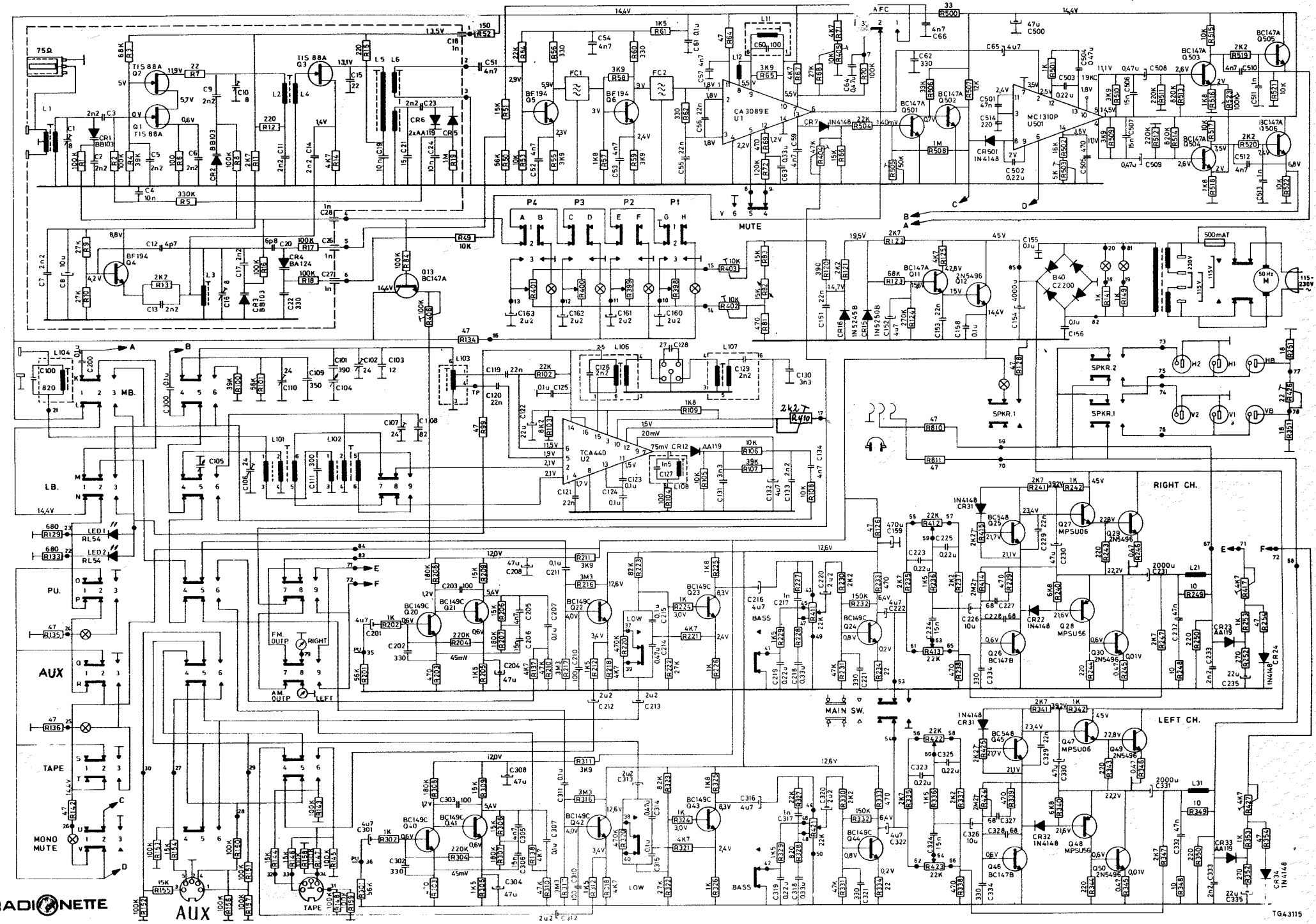
RADIONETTE
SM 240 G
AUX
TAPE
MONO MUTE
PU.
LB.
MB.
MUTE
AFC
RIGHT CH.
LEFT CH.
MAIN SW.
BASS
LOW
FM OUTP
AM OUTP
RIGHT
LEFT
SPKR.1
SPKR.2
CA 3089 E
MC 1310P
TCA 440
TG.43115

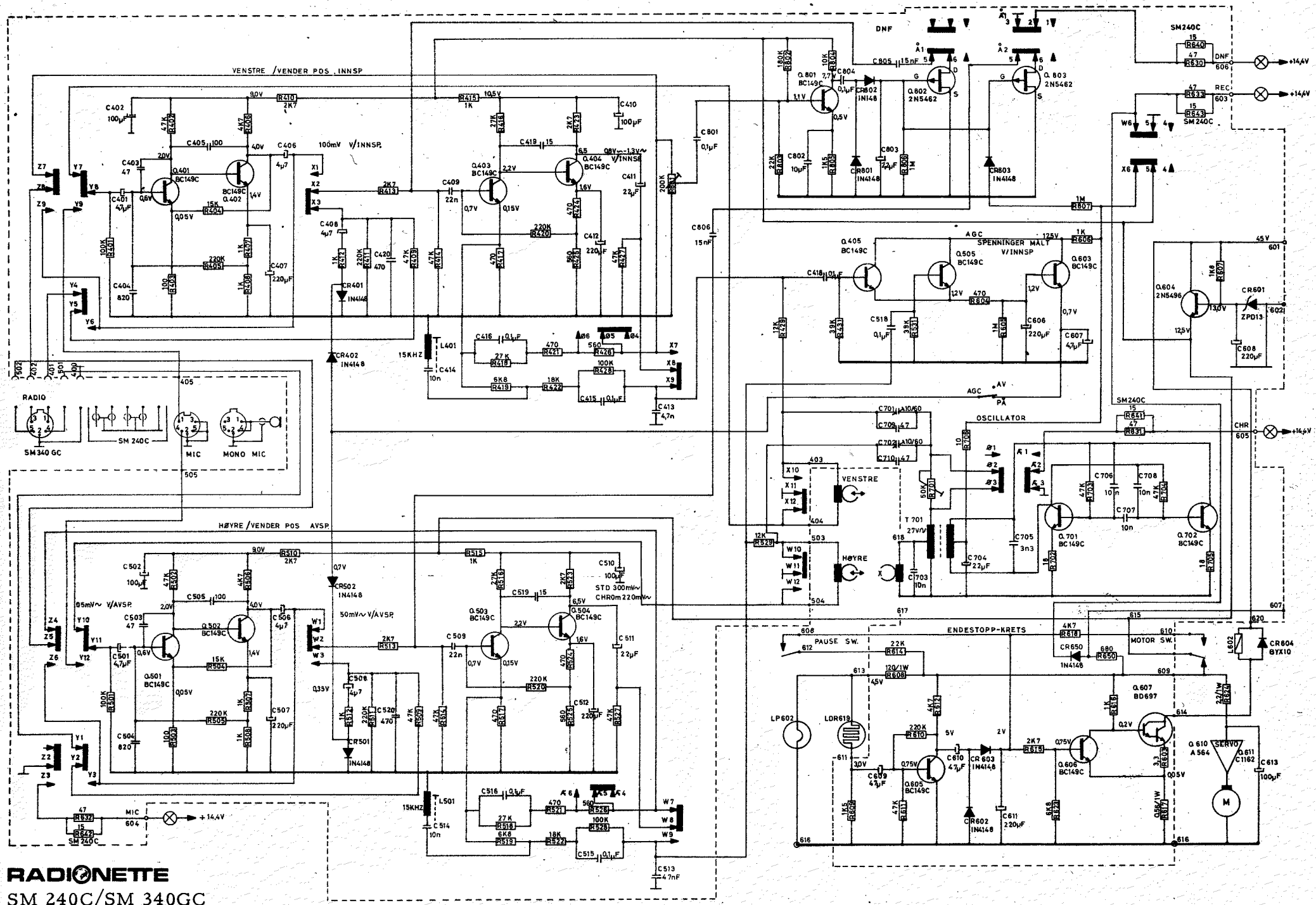

RADIONETTE

SM 240C/SM 340GC

KASSETTDEL

0376142 Part nr. 349290

SJASSISDELER
CHASSIS ASSEMBLY

Oppgi bestillingsnummer og beskrivelse ved bestilling
State order number and description when ordering

Ref. nr	Best. nr/Order no	Beskrivelse	Description
1	337631-SM 240GFM	Plate, front	Plate, front
2	318198-SM 240GFM	Instrument avstandsind.	Meter signal strength
3	316517-SM 240GFM	Instrument skala FM	Meter dial FM
4	330108-SM 240GFM	Vinkel, instrument , plast	Clamp, meter, plastic
5	220392-SM 240GFM	Skrue, 1/4"-4 pan	Screw, 1/4"-4 pan
6	331006-SM 240GFM	Knapp, sort, plast	Knob, black, plastic
7	332687-SM 240GFM	Vinkel, lager, plast	Bracket, angle, plastic
8	305900-SM 240GFM	Skrue, 5/16"-4 pan	Screw, 5/16"-4 pan
9	319024 -SM 240GFM	Holder, lampe, sort	Holder, bulb, black
10	220392-SM 240GFM	Skrue, 1/4"-4 pan	Screw, 1/4"-4 pan
11	284471A-SM 240GFM	Lampe 14V 80 mA m/ledninger	Bulb, 14V 80 mA with leads
12	317889-SM 240GFM	Knapp, potm. plast	Knob, potentiometer
13	310735-SM 240GFM	Styring, potm. sort, plast	Guide, potm. black, plastic
14	319570-SM 240GFM	Knapp, vender	Button, selector
15	319175-SM 240GFM	Potmæter, Lin. 100 kohm	Potentiometer, lin, 100 kohm
16	840030A-SM240GFM	Kontakt, jack, 3 pol. 1/4"	Socket, jack, 3 pole 1/4"
17	335582A-SM 240GFM	Vinkel , støtte, kontakt, plast	Bracket, support, socket, plastic
18	220392-SM 240GFM	Skrue 1/4"-4 pan	Screw, 1/4"-4 pan
19	336862-SM 240GFM	Skala, glass	Dial, glass
20	316891A-SM 240GFM	Plate, sjassi, venstre	Plate, chassis, left
21	330935-SM 240GFM	Deksel, venstre, front, plast	Cover, left, front, plastic
22	305900-SM 240GFM	Skrue, 5/16"-4 pan	Screw, 5/16"-4 pan
23	317343-SM 240GFM	Plate, sort, plast	Plate, black, plastic
24	314570-SM 240GFM	Skrue 3/4"-4 pan sort	Screw, 3/4"-4 pan, black
25	330518-SM 240GFM	Plate, side, sort	Plate, side, black
26	292718-SM 240GFM	Skrue 1/4"-2 pan	Screw 1/4"-2 pan
27	337128-SM 240GFM	Trafo, nett	Transformer, power
28	250786-SM 240GFM	Skrue, 3/4"-12 pan	Screw, 3/4"-12 pan
29	321107-SM 240GFM	Holder, sikring, 5x20 mm	Holder, fuse, 5x20 mm
30	220392-SM 240GFM	Skrue 1/4"-4 pan	Screw 1/4"-4 pan
31	270526-SM 240GFM	Sikring, 800 mAT, 5x20 mm	Fuse, 800 mAS 5x20 mm
32	321934-SM 240GFM	Plate, hengsel, venstre, plast	Plate, hinge, left, plastic
33 *	950233-SM 240GFM	Hengsel, komplett sett	Hinge, complete set
34	313176-SM 240GFM	Arm, hengsel, venstre, plast	Arm, hinge, left, plastic
36	311143-SM 240GFM	Fjær, hengsel	Spring, hinge
37	311495-SM 240GFM	Mutter, hengsel, plast	Nut, hinge, plastic
38	311999-SM 240GFM	Skrue, 3/4"-10 pan	Screw, 3/4"-10 pan
39	325597-SM 240GFM	Støvdeksel, plast	Dust cover, plastic
40	297925-SM 240GFM	Skrue, 5/16"-6 sort	Screw, 5/16"-6 black
41	337148-SM 240GFM	Skinne, sjassi, høyre, al. prof.	Plate, chassis, right al. profile
42	334649-SM 240GFM	Deksel, høyre, front, plast	Cover, right, front, plastic
43	339296-SM 240GFM	Plate, sort, plast	Plate, black, plastic
44	314570-SM 240GFM	Skrue, 3/4-4 pan sort	Screw, 3/4"-4 pan black
45	320368A-SM 240GFM	Plate, hengsel, høyre, plast	Plate, hinge, right, plastic
46	314857A-SM 240GFM	Arm, hengsel, høyre, plast	Arm, hinge, right, plastic
47	339253-SM 240GFM	Skinne, bak, al. prof.	Plate, back al. profile
48	321424-SM 240GFM	Vinkel, side, bak	Bracket, side, rear
49	292675-SM 240GFM	Skrue, 1/4"-4 sekskant	Screw, 1/4"-4 hex. head
50	339549-SM 240GFM	List, bakvegg	Trim, back wall
51	281454-SM 240GFM	Tube, gummi, nettledning	Tube, power cable
52	335927-SM 240GFM	Nettledning, m/støpsel	Power cable, with plug
53	334965-SM 240GFM	Knast, plast	Lug, plastic
54	305900-SM 240GFM	Skrue, 5/16"-4 pan	Screw, 5/16"-4 pan
55	267696-SM 240GFM	Kontakt, høyttaler, DIN	Socket, speaker, DIN
56	314749-SM 240GFM	Kjølefinne plate	Heat-sink plate
57	292675-SM 240GFM	Skrue, 1/4"-4 sekskant	Screw, 1/4"-4 hex. head
58	314103-SM 240GFM	Bøyle , transistorfeste, plast	Bracket, transistor mounting, plastic
59	327486-SM 240GFM	Skrue. 5/8"-6 pan	Screw, 5/8"-6 pan
60	Se partsliste for SM240/340 Platespiller (PE 3044)		See parts list for SM240/340 Record player (PE 3044)
61	337953-SM 240GFM	Topplate, teak	Top plate, teak
	330504-SM 240GFM	Topplate, palisander	Top plate, rosewood
	335920-SM 240GFM	Topplate, sort	Top plate, black
	339634-SM 240GFM	Topplate, nøtt	Top plate, walnut
62	314570-SM 240GFM	Skrue, 3/4"-4 pan, sort	Screw, 3/4"-4 pan black
63	333701-SM 240GFM	Deksel, bunn, plast	Cover, bottom, plastic
64	322817-SM 240GFM	Skrue, 5/16"-4 pan sort	Screw, 5/16"-4 pan, black
65	324297-SM 240GFM	Fot, gummi	Foot, rubber
66	333449-SM 240GFM	Skilt , sort, plast	Label, black, plastic
67	331768-SM 240GFM	Skilt , sort, plast	Label, black, plastic
68	269743-SM 240GFM	Fjær, jordings	Spring, earthing
69	305900-SM 240GFM	Skrue, 5/16"-4 pan	Screw, 5/16"-4 pan

* Omfatter, ref. nr. 34, 35, 36, 37, 38, 40, 46.
Includes ref. nos. 34, 35, 36, 37, 38, 40, 46.

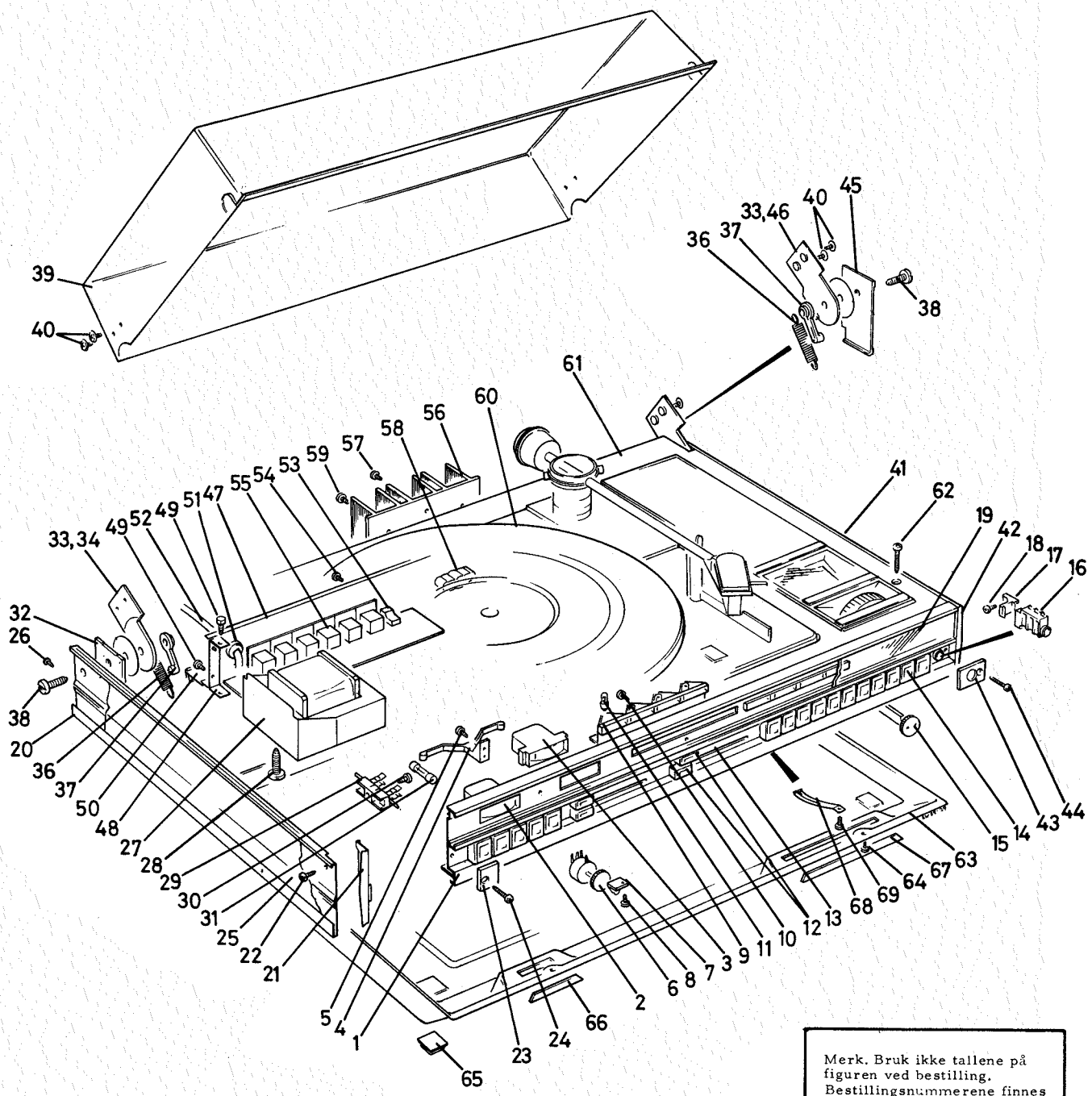

Merk. Bruk ikke tallene på figuren ved bestilling. Bestillingsnummerene finnes i listen.

Note. Do not use the numbers in the diagram when ordering. Order numbers are found in the list.

Fig. 1. Sjassisdeler
Chassis assembly

TUNERDEL
TUNER ASSEMBLY

Oppgi bestillingsnummer og beskrivelse ved bestilling
State order number and description when ordering

Ref. nr	Best. nr/Order no	Beskrivelse	Description
1	950188-SM 240GFM	Tuner, FM	Tuner, FM
2	335762-SM 240GFM	Panel, instrument, plast	Panel, meter, plastic
3	339728-SM 240GFM	Vindu, plast	Window, plastic
4	339455-SM 240GFM	Knapp, panel plast	Knob, panel, plastic
5	344785-SM 240GFM	Stoppring, 9,6 mm	Clip, 9.6 mm
6	337803-SM 240GFM	Instrument, panel	Meter, panel
7	336962-SM 240GFM	Boks, plast	Box, plastic
8	338126-SM 240GFM	Lokk , boks, plast	Cover, box, plastic
9	336122-SM 240GFM	Holder , instrument	Clamp, plastic
10	220392-SM 240GFM	Skrue, 1/4"-4 pan	Screw, 1/4"-4 pan
11	268832-SM 240GFM	Kontakt, 5 pin DIN, 180°	Socket, 5 pin DIN, 180°
12	312063-SM 240GFM	Kontakt, antenne	Socket, aerial
13	272703-SM 240GFM	Skive , nylon, sort	Washer , nylon, black
14	282833-SM 240GFM	Skrue, 3x10 mm	Screw, 3x10 mm
15	217152-SM 240GFM	Skive, 9x4, 3x0, 8 mm	Washer, 9x4, 3x0, 8 mm
16	252338-SM 240GFM	Skive, 8x3, 2x0, 5 mm	Washer, 8x3, 2x0, 5 mm
17	266368-SM 240GFM	Plate	Plate

TRYKTKRETSPLATER
PRINTED CIRCUIT BOARDS

18	950242-SM 240GFM	Plate, høyttaler kontakter, m/komp.	Board, speaker sockets, with components
	317616-SM 240GFM	Plate, høyttaler kontakt. uten komp.	Board, speaker sockets, without components
19	950243-SM 240GFM	Plate, likeretter, med komponenter	Board, rectifier, with components
	339203-SM 240GFM	Plate, likeretter, uten komponenter	Board, rectifier, without components
20	950244-SM 240GFM	Plate, vender venstre, med komp.	Board, selector, left, with components
	317379-SM 240GFM	Plate, vender venstre, uten komp.	Board, selector, left, without components
21	311676-SM 240GFM	Vender, trykk	Selector, push
22	950245-SM 240GFM	Plate , skyve potm. med komponenter	Board, slide potentiometer, with components
	318830-SM 240GFM	Plate , skyve potm. uten komponenter	Board, slide potentiometer, without components
23*	950247-SM 240GFM	Plate, hoved, med komponenter	Board, main, with components
	336466-SM 240GFM	Plate, hoved, uten komponenter	Board, main, without components
24	313709-SM 240GFM	Vender, trykk	Selector, push
25	950246-SM 240GFM	Plate, FM pot. meter m/komponent.	Board, FM potentiometer, with components
	315116-SM 240GFM	Plate, FM pot. meter uten komp.	Board, FM potentiometer, without components

* Ikke servicedel
Not service part.

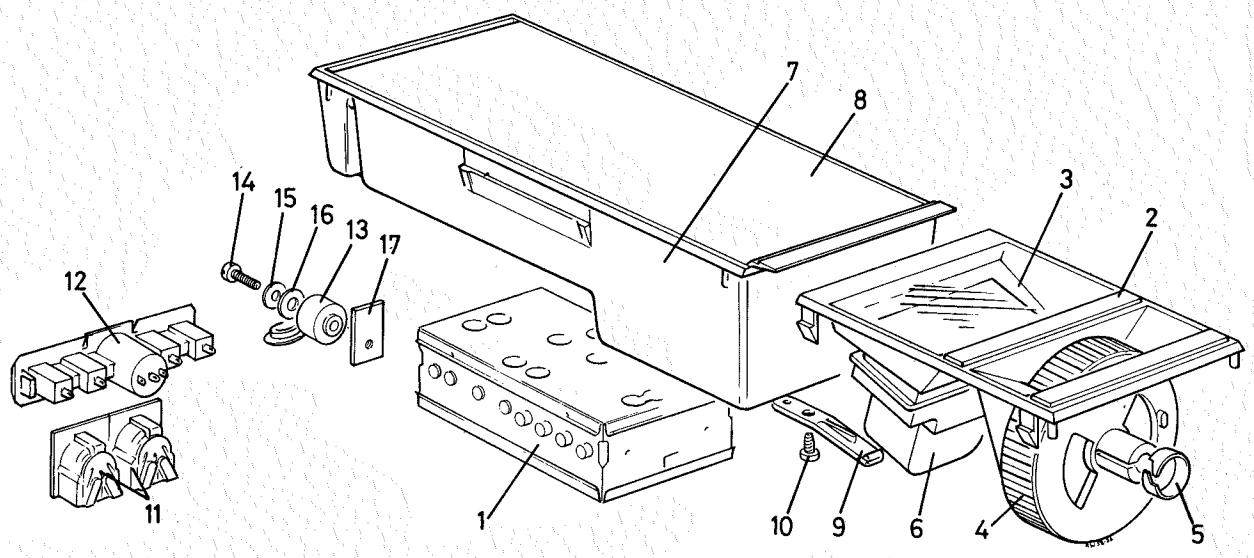

Fig. 2. Tunerdel
Tuner assembly

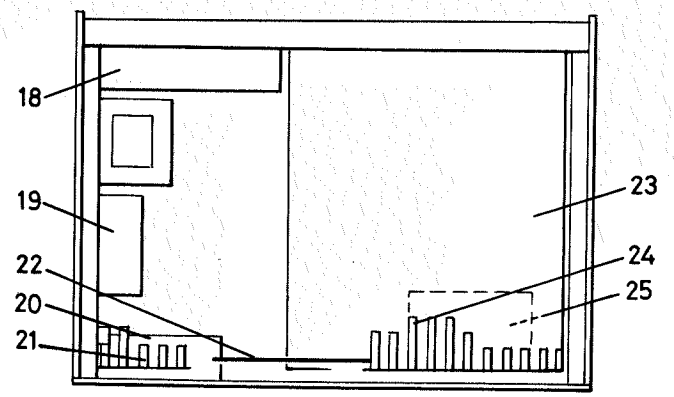

Merk. Bruk ikke tallene på figuren ved bestilling. Bestillingsnummerene finnes i listen.

Note. Do not use the numbers in the diagram when ordering. Order numbers are found in the list.

Fig. 3. Tryktkretsplater
Printed circuit boards

KONDENSATORER
CAPACITORS

	Oppgi dette ved bestilling Specify this when ordering			
Ref. nr	Best. nr/Order no.	Beskrivelse/Description		
C1	219945-SM 240GFM	Triko GSA 788 13125		
C2	323399-SM 240GFM	2200 pF	Ker 2	50V
C3	323399-SM 240GFM	2200 pF	Ker 2	50V
C4	321014-SM 240GFM	0,01 µF	Ker 2	40V
C5	252913-SM 240GFM	2200 pF	Ker 2	50V
C6	323399-SM 240GFM	2200 pF	Ker 2	50V
C7	323399-SM 240GFM	2200 pF	Ker 2	50V
C8	329082-SM 240GFM	10 µF	Elko	25V
C9	323399-SM 240GFM	2200 pF	Ker 2	50V
C10	219945-SM 240GFM	Triko		
C11	323399-SM 240GFM	2200 pF	Ker 2	50V
C12	248078-SM 240GFM	4,7 pF	Ker 1	400V
C13	323399-SM 240GFM	2200 pF	Ker 2	50V
C14	252913-SM 240GFM	2200 pF	Ker 2	50V
C15	323693-SM 240GFM	22 pF	Ker 1	63V
C16	263501-SM 240GFM	1,4-6 pF	Triko	
C17	323399-SM 240GFM	2200 pF	Ker 2	50V
C18	320037-SM 240GFM	1000 pF	Ker 2	350V
C19	321014-SM 240GFM	0,01 µF	Ker 2	40V
C20	252739-SM 240GFM	8,2 pF	Ker 1	400V
C21	324045-SM 240GFM	15 pF	Ker 1	63V
C22	324103-SM 240GFM	330 pF	Ker 1	63V
C23	323399-SM 240GFM	2200 pF	Ker 2	50V
C24	321014-SM 240GFM	0,01 µF	Ker 2	40V
C26	320037-SM 240GFM	1000 pF	Ker 2	500V
C27	320037-SM 240GFM	1000 pF	Ker 2	500V
C28	320037-SM 240GFM	1000 pF	Ker 2	500V
C51	287078-SM 240GFM	4700 pF	Ker 2	50V
C52	287078-SM 240GFM	4700 pF	Ker 2	50V
C53	287078-SM 240GFM	4700 pF	Ker 2	50V
C54	287078-SM 240GFM	4700 pF	Ker 2	50V
C55	252841-SM 240GFM	0,022 pF	Ker 2	40V
C56	252841-SM 240GFM	0,022 µF	Ker 2	40V
C57	287078-SM 240GFM	4700 pF	Ker 2	50V
C59	287078-SM 240GFM	4700 pF	Ker 2	50V
C60	294018-SM 240GFM	100 pF	P. sty	63V
C61	284370-SM 240GFM	0,1 µF	Folie	100V
C62	286101-SM 240GFM	330 pF	Ker 2	50V
C63	220154-SM 240GFM	0,47 µF	P. est	250V
C64	220154-SM 240GFM	0,47 µF	P. est	250V
C65	342098-SM 240GFM	4,7 µF	Elko	63V
C66	287078-SM 240GFM	4700 pF	Ker 2	50V
C151	252841-SM 240GFM	0,022 µF	Ker 2	40V
C152	343779-SM 240GFM	10 µF	Elko	63V
C153	252841-SM 240GFM	0,022 µF	Ker 2	40V
C154	313701-SM 240GFM	4700 pF	Elko	63V
C155	284370-SM 240GFM	0,1 µF	Folie	100V
C156	284370-SM 240GFM	0,1 µF	Folie	100V
C158	284370-SM 240GFM	0,1 µF	Folie	100V
C159	292488-SM 240GFM	470 µF	Elko	40V
C160	340417-SM 240GFM	2,2 µF	Elko	63V
C161	340417-SM 240GFM	2,2 µF	Elko	63V
C162	340417-SM 240GFM	2,2 µF	Elko	63V
C163	340417-SM 240GFM	2,2 µF	Elko	63V
C164	340417-SM 240GFM	2,2 µF	Elko	63V
C200	284370-SM 240GFM	0,1 µF	Folie	100V
C201	257279-SM 240GFM	4,7 µF	Elko	63V
C202	286101-SM 240GFM	330 pF	Ker 2	50V
C203	252955-SM 240GFM	100 pF	Ker 2	400V
C204	259522-SM 240GFM	47 µF	Elko	35V
C205	287078-SM 240GFM	4700 pF	Ker 2	50V
C206	281360-SM 240GFM	0,015 µF	Folie	100V
C207	284370-SM 240GFM	0,1 µF	Folie	100V
C208	259522-SM 240GFM	47 µF	Elko	35V
C210	252955-SM 240GFM	100 pF	Ker 2	400V
C211	284370-SM 240GFM	0,1 µF	Folie	100V
C212	340417-SM 240GFM	2,2 µF	Elko	63V
C213	340417-SM 240GFM	2,2 µF	Elko	63V
C214	281281-SM 240GFM	0,47 µF	Folie	100V
C215	284370-SM 240GFM	0,1 µF	Folie	100V
C216	342098-SM 240GFM	4,7 µF	Elko	63V
C217	251512-SM 240GFM	1000 pF	Ker 2	50V
C218	282416-SM 240GFM	0,33 µF	Folie	100V
C219	282337-SM 240GFM	0,22 µF	Folie	100V
C220	250535-SM 240GFM	2,2 µF	Elko	63V
C221	286101-SM 240GFM	330 pF	Ker 2	50V
C222	257279-SM 240GFM	4,7 µF	Elko	63V
C223	282337-SM 240GFM	0,22 µF	Folie	100V

KONDENSATORER
CAPACITORS

	Oppgi dette bestilling Specify this when ordering			
Ref. nr	Best. nr/Order no.	Beskrivelse/Description		
C224	281360-SM 240GFM	0,015 µF	Folie	100V
C225	282337-SM 240GFM	0,22 µF	Folie	100V
C226	343779-SM 240GFM	10 µF	Elko	63V
C227	251058-SM 240GFM	68 pF	Ker 2	400V
C228	251058-SM 240GFM	68 pF	Ker 2	400V
C229	252841-SM 240GFM	0,022 µF	Ker 2	40V
C230	343427-SM 240GFM	47 µF	Elko	35V
C231	285168-SM 240GFM	2200 pF	Elko	40V
C232	281281-SM 240GFM	0,047 µF	Folie	100V
C233	252913-SM 240GFM	2200 pF	Ker 2	50V
C234	286101-SM 240GFM	330 pF	Ker 2	50V
C235	340065-SM 240GFM	22 µF	Elko	35V
C300	284370-SM 240GFM	0,1 µF	Folie	100V
C301	257279-SM 240GFM	4,7 µF	Elko	63V
C302	286101-SM 240GFM	330 pF	Ker 2	50V
C303	252955-SM 240GFM	100 pF	Ker 2	400V
C304	259522-SM 240GFM	47 µF	Elko	35V
C305	287078-SM 240GFM	4700 pF	Ker 2	50V
C306	281360-SM 240GFM	0,015 µF	Folie	100V
C307	284370-SM 240GFM	0,1 µF	Folie	100V
C308	259522-SM 240GFM	47 µF	Elko	35V
C310	252955-SM 240GFM	100 pF	Ker 2	400V
C311	284370-SM 240GFM	0,1 µF	Folie	100V
C312	340417-SM 240GFM	2,2 µF	Elko	63V
C313	340417-SM 240GFM	2,2 µF	Elko	63V
C314	281281-SM 240GFM	0,47 µF	Folie	100V
C315	281439-SM 240GFM	0,1 µF	Folie	100V
C316	342098-SM 240GFM	4,7 µF	Elko	63V
C317	251512-SM 240GFM	1000 pF	Ker 2	50V
C318	282416-SM 240GFM	0,33 µF	Folie	100V
C319	282337-SM 240GFM	0,22 µF	Folie	100V
C320	340417-SM 240GFM	2,2 µF	Elko	63V
C321	286101-SM 240GFM	330 pF	Ker 2	50V
C322	257279-SM 240GFM	4,7 µF	Elko	63V
C323	282337-SM 240GFM	0,22 µF	Folie	100V
C324	281360-SM 240GFM	0,015 µF	Folie	100V
C325	282337-SM 240GFM	0,22 µF	Folie	100V
C326	343779-SM 240GFM	10 µF	Elko	63V
C327	251058-SM 240GFM	68 pF	Ker 2	400V
C328	251058-SM 240GFM	68 pF	Ker 2	400V
C329	252841-SM 240GFM	0,022 µF	Ker 2	40V
C330	343427-SM 240GFM	47 µF	Elko	35V
C331	285168-SM 240GFM	2200 µF	Elko	40V
C332	281281-SM 240GFM	0,047 µF	Folie	100V
C333	252913-SM 240GFM	2200 pF	Ker 2	50V
C334	286101-SM 240GFM	330 pF	Ker 2	50V
C335	340065-SM 240GFM	22 µF	Elko	35V
C500	259522-SM 240GFM	47 µF	Elko	35V
C501	281281-SM 240GFM	0,047 µF	Folie	100V
C502	282337-SM 240GFM	0,22 µF	Solie	100V
C503	282337-SM 240GFM	0,22 µF	Folie	100V
C504	331265-SM 240GFM	0,47 µF	P. karm	100V
C505	249715-SM 240GFM	470 pF	P. sty	63V
C506	281360-SM 240GFM	0,015 µF	Folie	100V
C507	281360-SM 240GFM	0,015 µF	Folie	100V
C508	271668-SM 240GFM	0,47 µF	Tant.	35V
C509	271668-SM 240GFM	0,47 µF	Tant.	35V
C510	287078-SM 240GFM	4700 pF	Ker 2	50V
C511	251512-SM 240GFM	1000 pF	Ker 2	50V
C512	287078-SM 240GFM	4700 pF	Ker 2	50V
C513	251512-SM 240GFM	1000 pF	Ker 2	50V
C514	206835-SM 240GFM	220 pF	Ker 2	400V

MOTSTANDER
RESISTORS

	Oppgi dette ved bestilling Specify this when ordering		
Ref. nr	Best. nr/Order no	Beskrivelse/Description	
R1	280944-SM 240GFM	100 kΩ	Sjikt 5%
R2	280944-SM 240GFM	100 kΩ	Sjikt 5%
R3	287408-SM 240GFM	68 kΩ	Sjikt 5%
R4	292049-SM 240GFM	39 kΩ	Sjikt 5%
R5	293730-SM 240GFM	330 kΩ	Sjikt 5%
R6	286862-SM 240GFM	150 Ω	Sjikt 5%
R7	293105-SM 240GFM	22 Ω	Sjikt 5%
R8	280944-SM 240GFM	100 kΩ	Sjikt 5%
R9	290368-SM 240GFM	27 kΩ	Sjikt 5%
R10	290368-SM 240GFM	27 kΩ	Sjikt 5%
R11	285454-SM 240GFM	2, 7 kΩ	Sjikt 5%
R12	288543-SM 240GFM	220 Ω	Sjikt 5%
R13	289168-SM 240GFM	2, 2 kΩ	Sjikt 5%
R14	285102-SM 240GFM	4, 7 kΩ	Sjikt 5%
R15	288543-SM 240GFM	220 Ω	Sjikt 5%
R16	280944-SM 240GFM	100 kΩ	Sjikt 5%
R17	280944-SM 240GFM	100 kΩ	Sjikt 5%
R18	280944-SM 240GFM	100 kΩ	Sjikt 5%
R19	285023-SM 240GFM	1 M7	Sjikt 5%
R49	286431-SM 240GFM	10 kΩ	Sjikt 5%
R50	285727-SM 240GFM	56 kΩ	Sjikt 5%
R51	289793-SM 240GFM	15 kΩ	Sjikt 5%
R52	286862-SM 240GFM	150 Ω	Sjikt 5%
R53	286431-SM 240GFM	10 kΩ	Sjikt 5%
R54	286079-SM 240GFM	22 kΩ	Sjikt 5%
R55	288816-SM 240GFM	3, 9 kΩ	Sjikt 5%
R56	288191-SM 240GFM	330 Ω	Sjikt 5%
R57	292753-SM 240GFM	1, 8 kΩ	Sjikt 5%
R58	288816-SM 240GFM	3, 9 kΩ	Sjikt 5%
R59	288816-SM 240GFM	3, 9 kΩ	Sjikt 5%
R60	288191-SM 240GFM	330 Ω	Sjikt 5%
R61	287487-SM 240GFM	1, 5 kΩ	Sjikt 5%
R62	288191-SM 240GFM	330 Ω	Sjikt 5%
R64	294786-SM 240GFM	47 Ω	Sjikt 5%
R65	288816-SM 240GFM	3, 9 kΩ	Sjikt 5%
R66	289793-SM 240GFM	15 kΩ	Sjikt 5%
R67	285102-SM 240GFM	4, 7 kΩ	Sjikt 5%
R68	290368-SM 240GFM	27 kΩ	Sjikt 5%
R69	289872-SM 240GFM	470 Ω	Sjikt 5%
R70	280944-SM 240GFM	100 kΩ	Sjikt 5%
R71	285102-SM 240GFM	4, 7 kΩ	Sjikt 5%
R72	289089-SM 240GFM	120 kΩ	Sjikt 5%
R81	287839-SM 240GFM	820 Ω	Sjikt 5%
R82	323938-SM 240GFM	15 kΩ	NTC 10%
R83	289793-SM 240GFM	15 kΩ	Sjikt 5%
R84	280944-SM 240GFM	100 kΩ	Sjikt 5%
R120	294786-SM 240GFM	47 Ω	Sjikt 5%
R121	289168-SM 240GFM	2, 2 kΩ	Sjikt 5%
R122	285454-SM 240GFM	2, 7 kΩ	Sjikt 5%
R123	292049-SM 240GFM	39 kΩ	Sjikt 5%
R124	285375-SM 240GFM	150 kΩ	Sjikt 5%
R125	289168-SM 240GFM	2, 2 kΩ	Sjikt 5%
R126	294786-SM 240GFM	47 Ω	Sjikt 5%
R128	294786-SM 240GFM	47 Ω	Sjikt 5%
R130	294786-SM 240GFM	47 Ω	Sjikt 5%
R131	321905-SM 240GFM	47 Ω	Tråd 10% 04024-202 2W
R132	321905-SM 240GFM	47 Ω	Tråd 10% 04024-202 2W
R134	294786-SM 240GFM	47 Ω	Sjikt 5%
R135	294786-SM 240GFM	47 Ω	Sjikt 5%
R136	294786-SM 240GFM	47 Ω	Sjikt 5%
R137	285102-SM 240GFM	4, 7 kΩ	Sjikt 5%
R138	285102-SM 240GFM	4, 7 kΩ	Sjikt 5%
R141	336351-SM 240GFM	820 Ω	ABT 107 10% 1W
R142	294786-SM 240GFM	47 Ω	Sjikt 5%
R143	280944-SM 240GFM	100 kΩ	Sjikt 5%
R144	289793-SM 240GFM	15 kΩ	Sjikt 5%
R145	280944-SM 240GFM	100 kΩ	Sjikt 5%
R146	289793-SM 240GFM	15 kΩ	Sjikt 5%
R147	280944-SM 240GFM	100 kΩ	Sjikt 5%
R148	280944-SM 240GFM	100 kΩ	Sjikt 5%
R149	336351-SM 240GFM	820 Ω	ABT 107 10% 1W
R150	280944-SM 240GFM	100 kΩ	Sjikt 5%
R151	280944-SM 240GFM	100 kΩ	Sjikt 5%
R152	280944-SM 240GFM	100 kΩ	Sjikt 5%
R153	280944-SM 240GFM	100 kΩ	Sjikt 5%
R154	289793-SM 240GFM	15 kΩ	Sjikt 5%
R155	289793-SM 240GFM	15 kΩ	Sjikt 5%
R156	280944-SM 240GFM	100 kΩ	Sjikt 5%

MOTSTANDER
RESISTORS

	Oppgi dette ved bestilling Specify this when ordering		
Ref. nr	Best. nr/Order no	Beskrivelse/Description	
R157	280944-SM 240GFM	100 kΩ	Sjikt 5%
R158	280944-SM 240GFM	100 kΩ	Sjikt 5 %
R159	280944-SM 240GFM	100 kΩ	Sjikt 5%
R201	285727-SM 240GFM	56 kΩ	Sjikt 5%
R202	289520-SM 240GFM	1 kΩ	Sjikt 5%
R203	289872-SM 240GFM	470 Ω	Sjikt 5%
R204	287056-SM 240GFM	220 kΩ	Sjikt 5%
R205	287487-SM 240GFM	1, 5 kΩ	Sjikt 5%
R206	289793-SM 240GFM	15 kΩ	Sjikt 5%
R207	305633-SM 240GFM	180 kΩ	Sjikt 5%
R208	305633-SM 240GFM	180 kΩ	Sjikt 5%
R209	289793-SM 240GFM	15 kΩ	Sjikt 5%
R210	289441-SM 240GFM	47 kΩ	Sjikt 5%
R211	288816-SM 240GFM	3, 9 kΩ	Sjikt 5%
R212	287487-SM 240GFM	1, 5 kΩ	Sjikt 5%
R216	290031-SM 240GFM	3, 3 MΩ	Sjikt 5%
R217	290031-SM 240GFM	3, 3 MΩ	Sjikt 5%
R218	285102-SM 240GFM	4, 7 kΩ	Sjikt 5%
R220	282625-SM 240GFM	470 kΩ	Sjikt 5%
R221	285102-SM 240GFM	4, 7 kΩ	Sjikt 5%
R222	290368-SM 240GFM	27 kΩ	Sjikt 5%
R223	284658-SM 240GFM	82 kΩ	Sjikt 5%
R224	289520-SM 240GFM	1 kΩ	Sjikt 5%
R225	292753-SM 240GFM	1, 8 kΩ	Sjikt 5%
R226	289520-SM 240GFM	1 kΩ	Sjikt 5%
R227	286079-SM 240GFM	22 kΩ	Sjikt 5%
R228	287839-SM 240GFM	820 Ω	Sjikt 5%
R229	287487-SM 240GFM	1, 5 kΩ	Sjikt 5%
R230	289168-SM 240GFM	2, 2 kΩ	Sjikt 5%
R231	289441-SM 240GFM	47 kΩ	Sjikt 5%
R232	285375-SM 240GFM	150 kΩ	Sjikt 5%
R233	289872-SM 240GFM	470 Ω	Sjikt 5%
R234	293105-SM 240GFM	22 Ω	Sjikt 5%
R235	285454-SM 240GFM	2, 7 kΩ	Sjikt 5%
R236	287487-SM 240GFM	1, 5 kΩ	Sjikt 5%
R237	289168-SM 240GFM	2, 2 kΩ	Sjikt 5%
R238	289872-SM 240GFM	470 Ω	Sjikt 5%
R239	289872-SM 240GFM	470 Ω	Sjikt 5%
R240	288464-SM 240GFM	6, 8 kΩ	Sjikt 5%
R241	285454-SM 240GFM	2, 7 kΩ	Sjikt 5%
R242	289520-SM 240GFM	1 kΩ	Sjikt 5%
R243	288543-SM 240 GFM	220 Ω	Sjikt 5%
R244	288543-SM 240GFM	220 Ω	Sjikt 5%
R245	284750-SM 240GFM	0, 47 Ω	Tråd 10% SKA2 2W
R246	284750-SM 240GFM	0, 47 Ω	Tråd 10% SKA 2 2W
R247	285454-SM 240GFM	2, 7 kΩ	Sjikt 5%
R248	285533-SM 240GFM	10 Ω	Sjikt 5%
R249	285533-SM 240GFM	10 Ω	Sjikt 5%
R250	288543-SM 240GFM	220 Ω	Sjikt 5%
R251	282875-SM 240GFM	18 Ω	Tråd 10% SKA3 3W
R252	286510-SM 240GFM	270 Ω	Sjikt 5%
R253	289520-SM 240GFM	1 kΩ	Sjikt 5%
R254	294786-SM 240GFM	47 Ω	Sjikt 5%
R301	285727-SM 240GFM	56 kΩ	Sjikt 5%
R302	289520-SM 240GFM	1 kΩ	Sjikt 5%
R303	289872-SM 240GFM	470 Ω	Sjikt 5%
R304	287056-SM 240GFM	220 kΩ	Sjikt 5%
R305	287487-SM 240GFM	1, 5 kΩ	Sjikt 5%
R306	289793-SM 240GFM	15 kΩ	Sjikt 5%
R307	305633-SM 240GFM	180 kΩ	Sjikt 5%
R308	305633-SM 240GFM	180 kΩ	Sjikt 5%
R309	289793-SM 240GFM	15 kΩ	Sjikt 5%
R310	289441-SM 240GFM	47 kΩ	Sjikt 5%
R311	288816-SM 240GFM	3, 9 kΩ	Sjikt 5%
R312	287487-SM 240GFM	1, 5 kΩ	Sjikt 5%
R316	290031-SM 240GFM	3, 3 MΩ	Sjikt 5%
R317	290031-SM 240GFM	3, 3 MΩ	Sjikt 5%
R318	285102-SM 240GFM	4, 7 kΩ	Sjikt 5%
R320	282625-SM 240GFM	470 kΩ	Sjikt 5%
R321	285102-SM 240GFM	4, 7 kΩ	Sjikt 5%
R322	290368-SM 240GFM	27 kΩ	Sjikt 5%
R323	284658-SM 240GFM	82 kΩ	Sjikt 5%
R324	289520-SM 240GFM	1 kΩ	Sjikt 5%
R325	292753-SM 240GFM	1, 8 kΩ	Sjikt 5%
R326	289520-SM 240GFM	1 kΩ	Sjikt 5%
R327	286079-SM 240GFM	22 kΩ	Sjikt 5%
R328	287839-SM 240GFM	820 Ω	Sjikt 5%
R329	287487-SM 240GFM	1, 5 kΩ	Sjikt 5%

MOTSTANDER
RESISTORS

Ref. nr	Oppgi dette ved bestilling / Specify this when ordering: Best. nr/Order no	Beskrivelse/Description	
R330	289168-SM 240GFM	2,2 kΩ	Sjikt 5%
R331	289441-SM 240GFM	47 kΩ	Sjikt 5%
R332	285375-SM 240GFM	150 kΩ	Sjikt 5%
R333	289872-SM 240GFM	470 Ω	Sjikt 5%
R334	293105-SM 240GFM	22 Ω	Sjikt 5%
R335	285454-SM 240GFM	2,7 kΩ	Sjikt 5%
R336	287487-SM 240GFM	1,5 kΩ	Sjikt 5%
R337	289168-SM 240GFM	2,2 kΩ	Sjikt 5%
R338	289872-SM 240GFM	470 Ω	Sjikt 5%
R339	289872-SM 240GFM	470 Ω	Sjikt 5%
R340	288464-SM240 GFM	6,8 kΩ	Sjikt 5%
R341	285454-SM 240GFM	2,7 kΩ	Sjikt 5%
R342	289520-SM 240GFM	1 kΩ	Sjikt 5%
R343	288543-SM 240GFM	220 Ω	Sjikt 5%
R344	288543-SM 240GFM	220 Ω	Sjikt 5%
R345	284750-SM 240GFM	0,47 Ω Tråd	10% SKA2 2W
R346	284750-SM 240GFM	0,47 Ω Tråd	10% SKA2 2W
R347	285454-SM 240GFM	2,7 kΩ	Sjikt 5%
R348	285533-SM 240GFM	10 Ω	Sjikt 5%
R349	285533-SM 240GFM	10 Ω	Sjikt 5%
R350	288543-SM 240GFM	220 Ω	Sjikt 5%
R351	282875-SM 240GFM	18 Ω Tråd	10% SKA3 3W
R352	286510-SM 240GFM	270 Ω	Sjikt 5%
R353	289520-SM 240GFM	1 kΩ	Sjikt 5%
R354	294786-SM 240GFM	47 Ω	Sjikt 5%
R500	287214-SM 240GFM	33 Ω	Sjikt 5%
R501	289520-SM 240GFM	1 kΩ	Sjikt 5%
R502	306129-SM 240GFM	16,2 kΩ	Met. film 1% type 471
R504	286079-SM 240GFM	22 kΩ	Sjikt 5%
R506	287760-SM 240GFM	33 kΩ	Sjikt 5%
R507	288112-SM 240GFM	12 kΩ	Sjikt 5%
R508	285023-SM 240GFM	1 MΩ	Sjikt 5%
R509	288816-SM 240GFM	3,9 kΩ	Sjikt 5%
R510	288816-SM 240GFM	3,9 kΩ	Sjikt 5%
R511	287056-SM 240GFM	220 kΩ	Sjikt 5%
R512	287056-SM 240GFM	220 kΩ	Sjikt 5%
R513	294564-SM 240GFM	820 kΩ	Sjikt 5%
R514	294564-SM 240GFM	820 kΩ	Sjikt 5%
R515	286431-SM 240GFM	10 kΩ	Sjikt 5%
R516	292753-SM 240GFM	1,8 kΩ	Sjikt 5%
R517	286431-SM 240GFM	10 kΩ	Sjikt 5%
R518	292753-SM 240GFM	1,8 kΩ	Sjikt 5%
R519	289168-SM 240GFM	2,2 kΩ	Sjikt 5%
R520	289168-SM 240GFM	2,2 kΩ	Sjikt 5%
R521	286431-SM 240GFM	10 kΩ	Sjikt 5%
R522	286431-SM 240GFM	10 kΩ	Sjikt 5%

POTENSIOMETERE
POTENTIOMETERS

R397	336948-SM 240GFM	100 kΩ	FM innstilling/FM tuning
R398	319175-SM 240GFM	100 kΩ	FM preset P1
R399	319175-SM 240GFM	100 kΩ	FM preset P2
R400	319175-SM 240GFM	100 kΩ	FM preset P3
R401	319175-SM 240GFM	100 kΩ	FM preset P4
R402	262703-SM 240GFM	10 kΩ	Varicap spenning/Varicap voltage
R403	262703-SM 240GFM	10 kΩ	Varicap spenning/Varicap voltage
R404	264384-SM 240GFM	50 kΩ	FM indikator, innstilling/ FM indicator/tuning
R405	262703-SM 240GFM	10 kΩ	AFC
R406	273106-SM 240GFM	100 kΩ	FM indikator, skala preset/ FM ind. dial preset
R407	273106-SM 240GFM	100 kΩ	FM indikator, skala innst. / FM ind. dial tuning
R408	261022-SM 240GFM	5 kΩ	FM indikator, skala innst. / FM ind. dial tuning
R411	317494-SM 240GFM	22 kΩ	Lydstyrke/volume
R412	327048-SM 240GFM	22 kΩ	Diskant/Treble
R413	327048-SM 240GFM	22 kΩ	Bass
R414	320045-SM 240GFM	2,2 MΩ	Midspenning/centre voltage
R415	255226-SM 240GFM	2 kΩ	Hvilestrøm/quiescent current
R417	261022-SM 240GFM	5 kΩ	Utgangsmeter/Outputmeter
R421	317494-SM 240GFM	22 kΩ	Lydstyrke/volume
R422	327048-SM 240GFM	22 kΩ	Diskant/treble
R423	327048-SM 240GFM	22 kΩ	Bass
R424	320045-SM 240GFM	2,2 MΩ	Midspenning/centre voltage
R425	255226-SM 240GFM	2 kΩ	Hvilestrøm/quiescent current
R426	319815-SM 240GFM	22 Ω	Ambiofoni/Ambiophony
R427	261022-SM 240GFM	5 kΩ	Utgangsmeter/Outputmeter
R503	289248-SM 240GFM	5 kΩ	19 kHz
R505	253020-SM 240GFM	50 kΩ	Stereo/mono switch
R523	273106-SM 240GFM	100 kΩ	Kanal separasjon/Channel separation

SPOLER
COILS

L5	980153-SM 240GFM	FM-MF primær spole/FM-IF primary coil
L6	980154-SM 240GFM	FM-MF sek. spole/FM-IF secondary coil
L11	980192-SM 240GFM	FM detektor/FM detector
L12	283846-SM 240GFM	15 µH EL0810 SK-150K
L21	980104-SM 240GFM	Drossel/choke
L31	980104-SM 240GFM	Drossel/choke

TRANSISTORER
TRANSISTORS

Ref. nr	Oppgi dette ved bestilling / Specify this when ordering: Best. nr/Order no	Beskrivelse/Description
Q1	282925-SM 240GFM	40822
Q3	324756-SM 240GFM	TIS-88A
Q4	243831-SM 240GFM	BF 194
Q5	243831-SM 240GFM	BF 194
Q6	243831-SM 240GFM	BF 194
Q11	230291-SM 240GFM	BC 147B
Q12	336042-SM 240GFM	2N6099
Q13	230291-SM 240GFM	BC 147B
Q20	246483-SM 240GFM	BC 149C
Q21	246483-SM 240GFM	BC 149C
Q22	246483-SM 240GFM	BC 149C
Q23	246483-SM 240GFM	BC 149C
Q24	246483-SM 240GFM	BC 149C
Q25	325094-SM 240GFM	BC 548B
Q26	230291-SM 240GFM	BC 147B
Q27	282617-SM 240GFM	MPS U06
Q28	284298-SM 240GFM	MPS U56
Q29	336042-SM 240GFM	2N 6099
Q30	336042-SM 240GFM	2N 6099
Q40	246483-SM 240GFM	BC 149C
Q41	246483-SM 240GFM	BC 149C
Q42	246483-SM 240GFM	BC 149C
Q43	246483-SM 240GFM	BC 149C
Q44	246483-SM 240GFM	BC 149C
Q45	325094-SM 240GFM	BC 548B
Q46	230291-SM 240GFM	BC 147B
Q47	282617-SM 240GFM	MPS U06
Q48	284298-SM 240GFM	MPS U56
Q49	336042-SM 240GFM	2N6099
Q50	336042-SM 240GFM	2N6099
Q501	231771-SM 240GFM	BC 147A
Q502	231771-SM 240GFM	BC 147A
Q503	231771-SM 240GFM	BC 147A
Q504	231771-SM 240GFM	BC 147A
Q505	231771-SM 240GFM	BC 147A
Q506	231771-SM 240GFM	BC 147A

DIODER
DIODES

D1	266339-SM 240GFM	BB 103
D2	266339-SM 240GFM	BB 103
D3	266339-SM 240GFM	BB 103
D4	213948-SM 240GFM	BA 124
D5	205068-SM 240GFM	2AA 119
D6	205068-SM 240GFM	2AA 119
CR7	247007-SM 240GFM	IN 4148
CR15	323348-SM 240GFM	IN 5250B Zener 20V
CR16	274607-SM 240GFM	IN 5245B Zener 15V
CR21	247007-SM 240GFM	IN 4148
CR22	247007-SM 240GFM	IN 4148
CR23	205068-SM 240GFM	2AA 119
CR24	247007-SM 240GFM	IN 4148
CR31	247007-SM 240GFM	IN 4148
CR32	247007-SM 240GFM	IN 4148
CR33	205068-SM 240GFM	2AA 119
CR34	247007-SM 240GFM	IN 4148
CR501	247007-SM 240GFM	IN 4148

INTEGRERTE KRETSER
INTEGRATED CIRCUITS

FM-U1	296898-SM 240GFM	CA 3089E
U501	293594-SM 240GFM	MC 1310P

KERAMISKE FILTRE
CERAMIC FILTERS

FC1	322537-SM 240 GFM
FC2	322537-SM 240 GFM

LIKERETTER
RECTIFIER

D17-20	283306-SM 240 GFM	B40-C3200/2200

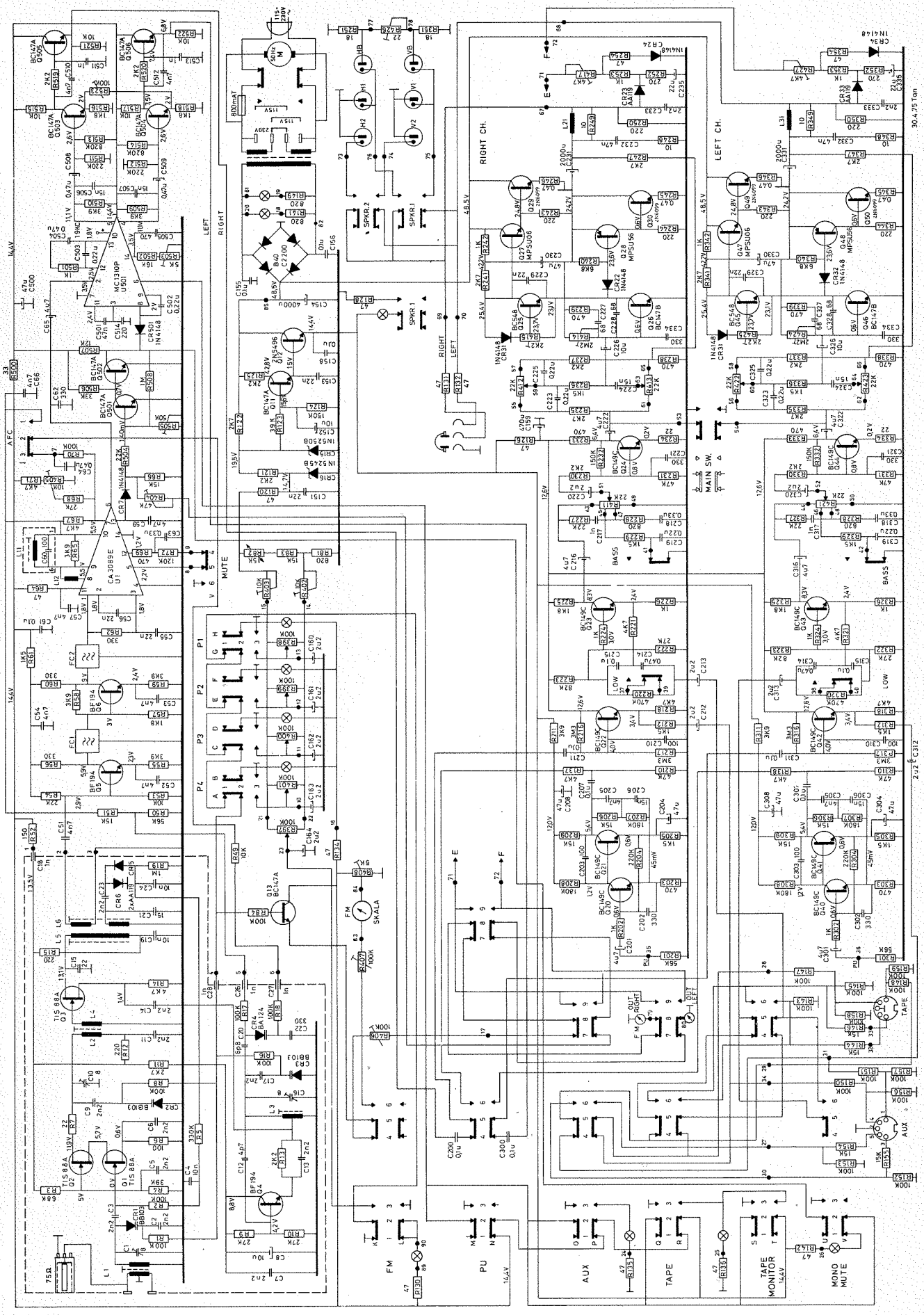

Fig. 4. Hovedskjema
Main circuit diagram

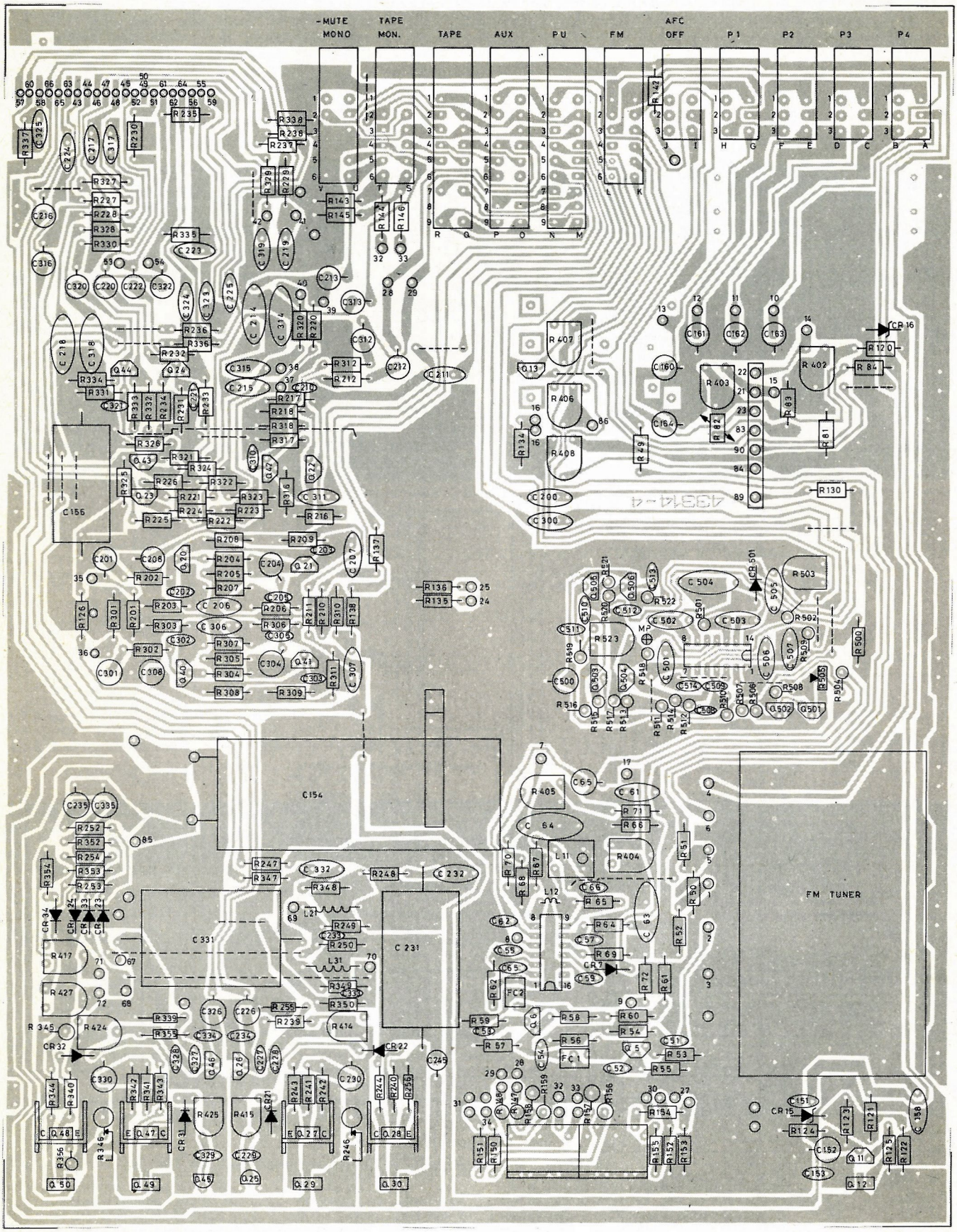

Fig. 5. Hovedplate, fra foliesiden
Main board, from printed side

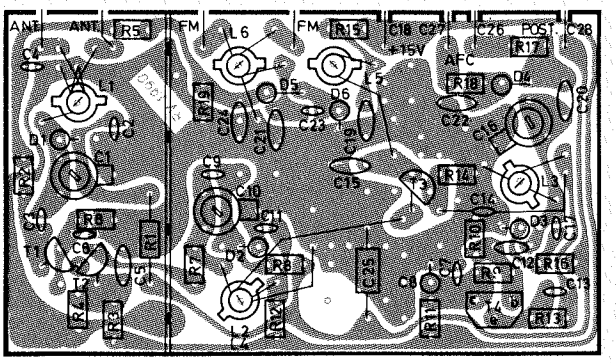

Fig. 6. FM tuner

NOTATER
NOTES

RADIONETTE

1301 SANDVIKA, NORGE
Telefon 544860
Telex 18007 Kurer N

Generalagenter i Norden:

Radionette AB
St. Göransgatan 84
10028 Stockholm
Sverige

Tandberg Radio A/S
Brandstrupsvej 10,
2610 Rødovre
Danmark

OY Tandberg Radio AB
Atomitie 5
Helsinki 37
Finland

Printed in Norway Tøyen Trykk A/S 0276155

RADIONETTE

SM 240 C

ILLUSTRERT DELELISTE
ILLUSTRATED PARTS LIST

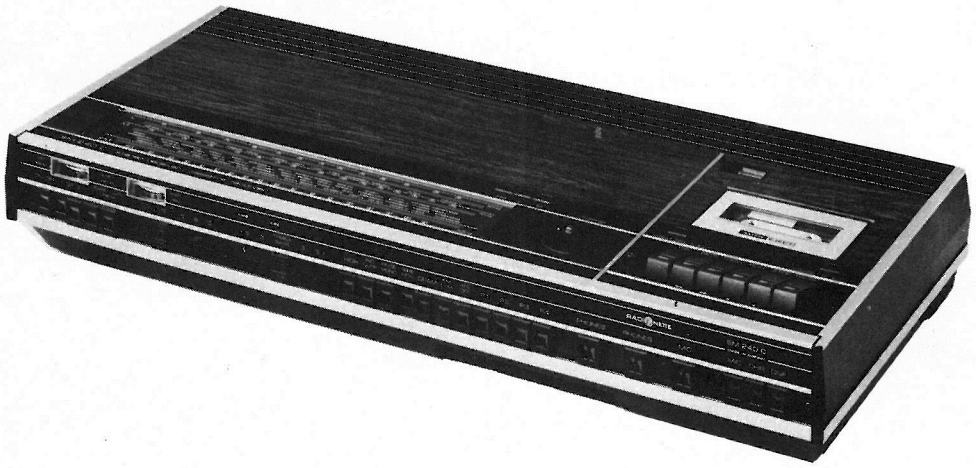

Innhold

Sjassis-enhet 2, 3
Tuner-enhet 4
TK plater 5
Kontakter 5
Vendere 6
Emballasje, tilbehør 6
Kassettverket 7-9
Elektriske deler 10-13
Koplingsskjemaer 14-15

Contents

Chassis assembly 2, 3
Tuner assembly 4
Printed circuit boards 5
Connectors 5
Switches 6
Packing, accessories 6
Cassette mechanism 7-9 and 16
Electrical parts 10-13
Circuit diagrams 14-15

Ved alle henvendelser, vennligst oppgi apparatets type og nummer.
Ved bestilling av deler, oppgi bestillingsnummer og beskrivelse.

For all enquiries, please state the set's type and number.
When ordering, give the part's order number and description.

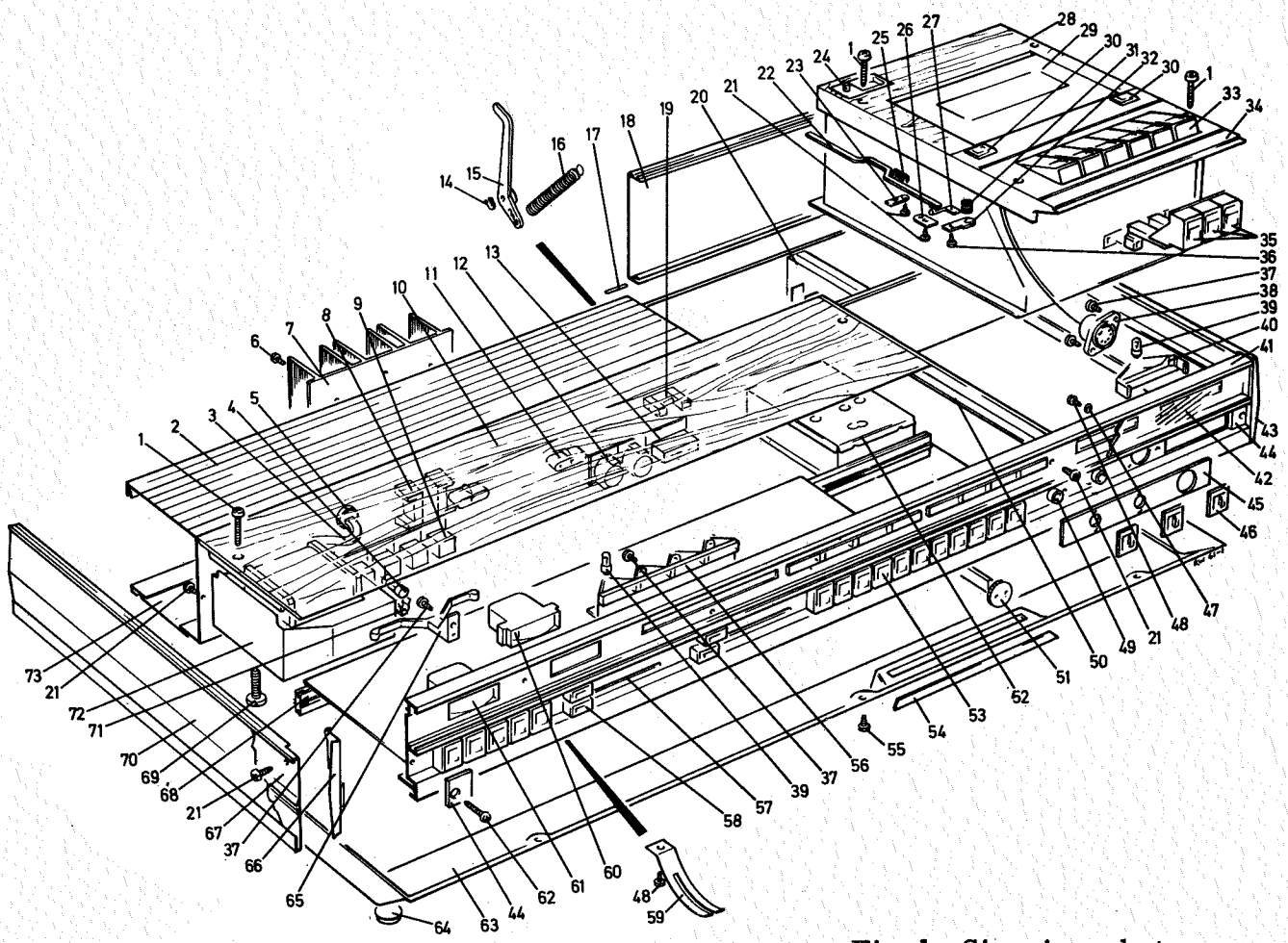

Fig. 1. Sjassis-enhet
Chassis assembly

SJASSIS-ENHET
CHASSIS ASSEMBLY

	Oppgi bestillingsnummer og beskrivelse ved bestilling State order number and description when ordering		
Ref. nr	Best. nr/Order no	Beskrivelse	Description
1	336423-SM 240C	Skrue, plate, 1" nr. 4 pan h. sort	Screw, plate, 1" no. 4 pan hd, black
2	343686-SM 240C	Skinne, bak	Plate, rear
3	335569-SM 240C	Ledning, nett, m/plugg	Cable, power, with plug
4		Sikringer, se side 12	Fuses, see page 12
5	284744-SM 240C	Hylse, nettledning	Grommet, cable, power
6	327486-SM 240C	Skrue, plate, 5/8" nr. 6 pan h.	Screw, plate, 5/8" no. 6 pan hd.
7	314749A-SM 240C	Kjølefinne	Heatsink
8	344520-SM 240C	Kontakt, høyttaler, DIN	Socket, loudspeaker, DIN
9	267696-SM 240C	Kontakt, høyttaler, DIN	Socket, loudspeaker, DIN
10	342436-SM 240C	Plate, topp, teak	Panel, teak
	340755-SM 240C	Plate, topp, palisander	Panel, palisander
	344117-SM 240C	Plate, topp, nøtt	Panel, walnut
	340403-SM 240C	Plate, topp, sort	Panel, black
11	318320-SM 240C	Holder, transistorfeste, plast	Holder, transistor mounting, plastic
12	268832-SM 240C	Kontakt, 5 pin DIN 180 grader	Socket, 5 pin DIN 180 degrees
13	341273-SM 240C	Kontakt, antenne FM	Socket, antenna FM
14	208431-SM 240C	Ring, klemring, 3 mm	Ring, retaining, external, 3 mm
15	342695-SM 240C	Arm	Arm
16	346128-SM 240C	Fjær	Spring
17	345094-SM 240C	Tapp	Pin
18	341653-SM 240C	Plate	Cover, storage box
19	341351-SM 240C	Kontakt, antenne AM	Socket, antenna AM
20	343765-SM 240C	Boks, magasin, plast, sort	Box, storage, plastic, black
21	234931-SM 240C	Skrue, plate, 3/8" nr. 4 pan h.	Screw, plate, 3/8" no. 4 pan hd
22	337049-SM 240C	Arm, kassett, plast	Arm, locking, plastic
23	349971-SM 240C	Holder	Plate
24	339806-SM 240C	Vindu, telleverk, plast	Window, counter, plastic
25	347809-SM 240C	Fjær	Spring
26	348290-SM 240C	Holder	Plate
27	342084-SM 240C	Arm, vippe, plast	Arm, rocking, plastic
28	341107-SM 240C	Plate, topp, teak	Panel, teak
	335648-SM 240C	Plate, topp, palisander	Panel, palisander
	342788-SM 240C	Plate, topp, nøtt	Panel, walnut
	344469-SM 240C	Plate, topp, sort	Panel, black
29	330230-SM 240C	Cass. verk Komplett	Deck, cassette Complete
30	338766A-SM240C	Knapp, trykk, sort, plast	Button, push, black, plastic
31	324663-SM 240C	Fjær	Spring
32	324311-SM 240C	Plate	Plate
33	333542-SM 240C	Knapp, sort, plast	Knob, black, plastic
34	342982-SM 240C	Plate, kassettbetjening	Plate, cassette
35	319025-SM 240C	Knapp, trykk, sort, plast	Button, push, black, plastic
36	320511-SM 240C	Skrue, plate, 5/16" nr. 4 pan h.	Screw, plate, 5/16" no. 4 pan hd
37	220392-SM 240C	Skrue, plate, 1/4" nr. 4 pan h.	Screw, plate, 1/4" no. 4 pan hd
38	316913-SM 240C	Kontakt, 5 pin DIN 180 grader	Socket, 5 pin DIN 180 degrees
39	284471A-SM240C	Lamper, se side 12	Bulbs, see page 12
40	333822-SM 240C	Holder, plast	Holder, plastic
41	344282-SM 240C	Skinne, front	Plate, front
42	346890-SM 240C	Skala, glass	Dial, glass
43	334649-SM 240C	Deksel, høyre, plast	Cover, right, plastic
44	317343-SM 240C	Plate, sort, plast	Plate, black, plastic
45	315662-SM 240C	Styring, plast, sort	Plate, plastic, black
46	316208-SM 240C	Knapp, luke, sort, plast	Cover, black, plastic
47	324757-SM 240C	Skive, 6x3, 2x0, 5 mm	Washer, 6x3. 2x0. 5 mm
48	238645-SM 240C	Skrue, plate, 3/16" nr. 4 pan h.	Screw, plate, 3/16" no. 4 pan hd
49	950250-SM 240C	Kontakt, jack, 3-polet 1/4 " .	Socket, jack, 3 pole 1/4 ".
50	340834-SM 240C	Skinne, sjassis	Plate, chassis
51	319175-SM 240C	Potensiometer, lin, 100 kohm	Potentiometer, Lin, 100 kohm
52	950188-SM 240C	Tuner, FM	Tuner, FM
53	319570-SM 240C	Knapp, trykk, sort, plast	Button, push, black, plastic
54	331768-SM 240C	Skilt, sort, plast (Kun på tidl. app)	Label, black, plastic (earlier sets only)
55	324850-SM 240C	Skrue, plate, 1/4" nr. 4 pan, sort	Screw, plate, 1/4" nr. 4 pan hd, black
56	319024-SM 240C	Holder, plast	Holder, plastic
57	310735-SM 240C	Styring, potensiometer, sort, plast	Guide, potentiometer, black, plastic
58	317889-SM 240C	Knapp, sort, plast, skyvepotm.	Knob, black, plastic, slide pot. meters
59	269743-SM 240C	Fjær, jording	Spring, flat, earthing
60	349247-SM 240C	Instrument, skala FM (lamper, se s. 12)	Meter, dial FM (Bulbs see p. 12)
61	345533-SM 240C	Instrument, signal	Meter, signal
62	314570-SM 240C	Skrue, plate, 3/4" nr4 pan h, sort	Screw, plate, 3/4" no. 4 pan hd, black
63	339527-SM 240C	Deksel, bunn, plast	Cover, bottom, plastic
64	324297-SM 240C	Fot, gummi	Foot, rubber
65	330108-SM 240C	Vinkel, plast	Clamp, plastic
66	330935-SM 240C	Deksel, venstre, plast	Cover, left, plastic
67 *	343334-SM 240C	Skinne, sjassis, venstre	Plate, chassis, left
68	343672-SM 240C	Skinne, sjassis, TK plater	Rail, chassis
69	250786-SM 240C	Skrue, plate, 3/4" nr. 12 pan h.	Screw, plate, 3/4" no. 12 pan hd
70	340382-SM 240C	Plate, side, plast, sort	Plate, side, plastic, black
71	277509-SM 240C	Holder, sikring	Holder, fuse
72	346610-SM 240C	Transformator, nett	Transformer, power
73	341625-SM 240C	List, bakvegg	Label

* 341301-SM 240C Skinne sjassis, høyre/Plate chassis, right

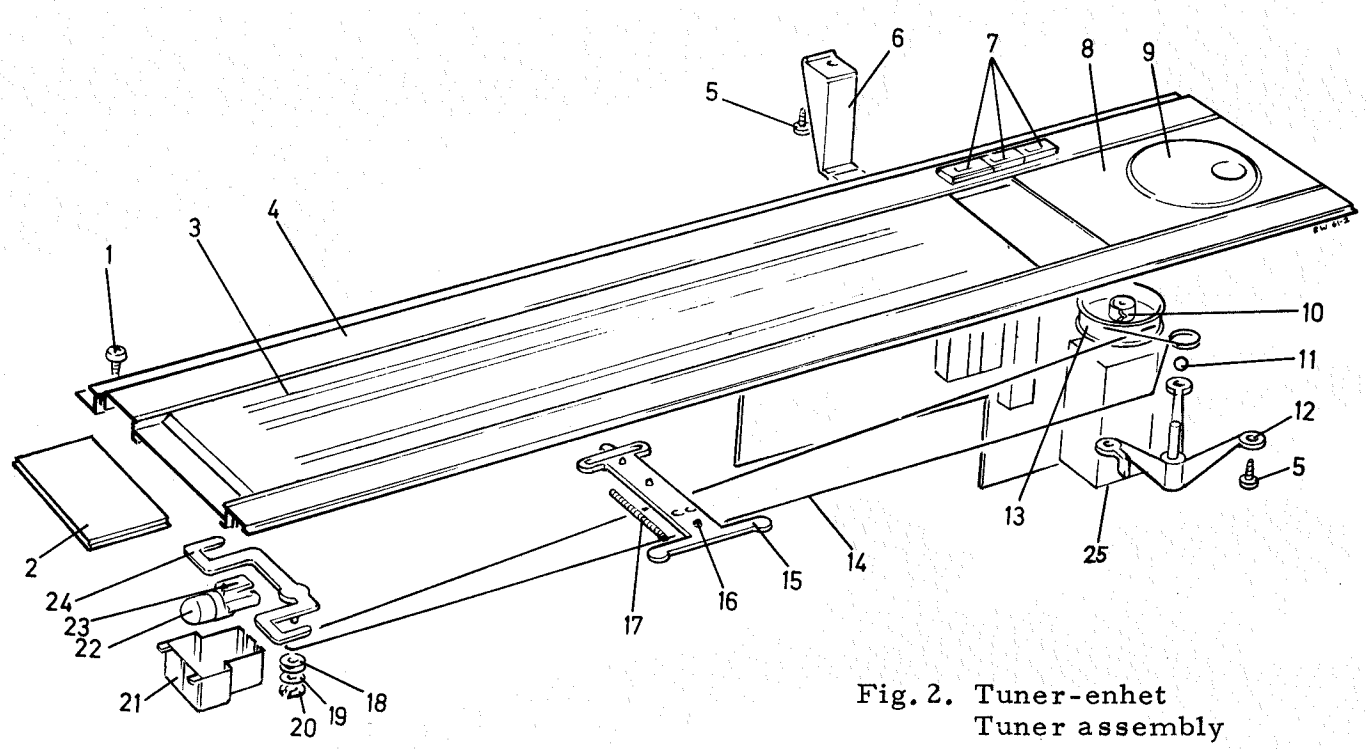

Fig. 2. Tuner-enhet
Tuner assembly

TUNER-ENHET
TUNER ASSEMBLY

	Oppgi bestillingsnummer og beskrivelse ved bestilling State order number and description when ordering		
Ref. nr	Best. nr/Order no	Beskrivelse	Description
1	227209-SM 240C	Skrue, plate, 1/4" nr. 4 pan h.	Screw, plate, 1/4" no. 4 pan hd
2	342616-SM 240C	Plate, skala, plast, sort	Plate, dial, plastic, black
3	346846-SM 240C	Skala, plast	Dial, plastic
4	341380-SM 240C	Skinne, skala	Plate, dial
5	305900-SM 240C	Skrue, plate, 5/16" nr. 4 pan h.	Screw, plate, 5/16" no. 4 pan hd
6	344965-SM 240C	Brakett, plast	Bracket, plastic
7	344484A-SM240C	Knapp, trykk, sort, plast	Button, push, black, plastic
8	344297-SM 240C	Plate, skala, plast, sort	Plate, dial, plastic, black
9	340583-SM 240C	Knapp, sort med trinse	Knob, black with pulley
10	324434-SM 240C	Ring	Clip
11	233229-SM 240C	Kule, lager, 4 mm	Ball, bearing, 4 mm
12	344649-SM 240C	Holder, Skalasnor	Holder, dial cord
13	342264-SM 240C	Hjul, snor	Wheel, cord
14	950274-SM 240C	Snor, m/fjær	Cord, with spring
15*	950273-SM 240C	Viser, m/dioder	Cursor, with diodes
16	332307-SM 240C	Diode, lysemitterende RL 54	Diode, light emitting RL 54
17	323528-SM 240C	Fjær	Spring
18	320841-SM 240C	Trinse	Pulley
19	248042-SM 240C	Skive, 7, 5x3, 1x0, 3 mm, Turbaks	Washer, 7. 5x3. 1x0. 3 mm, Turbax
20	208431-SM 240C	Ring, klemring, 3 mm	Ring, Retaining, external, 3 mm
21	340935-SM 240C	Kappe, lys, plast	Cover, light, plastic
22	341316-SM 240C	Lampe, 12-15V 1W	Bulb, 12-15V 1W
23	343349-SM 240C	Holder, lampe	Holder, bulb
24	342968-SM 240C	Holder, skalasnor, plast	Holder, dial cord, plastic
25	342860-SM240 C	Dreiekond.	Variable condenser
* 15	341014-SM240 C	Viser, umontert	Cursor, without components

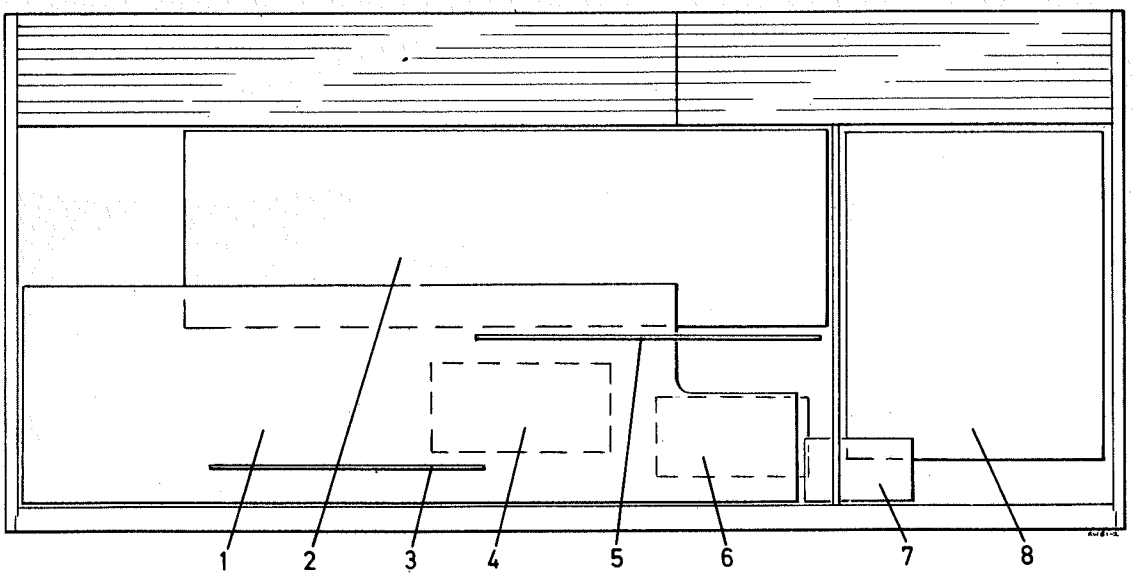

Fig. 3. TK plater
PC boards

TK PLATER
PRINTED CIRCUIT BOARDS

	Oppgi bestillingsnummer og beskrivelse ved bestilling State order number and description when ordering		
Ref. nr	Best. nr/Order no	Beskrivelse	Description
1	950267-SM 240C	Plate, forforsterker	Board, preamplifier
2	950266-SM 240C	Plate, LF/FM	Board, LF/FM
3	950268-SM 240C	Plate, volum/tone	Board, volume/tone
4	950269-SM 240C	Plate, diodevender	Board, diode switch
5	950270-SM 240C	Plate, AM	Board, AM
6	950271-SM 240C	Plate, FM-prepotensiometer	Board, FM preset
7	950272-SM 240C	Plate, hodetelefon	Board, headphones
8	950240-SM 240C	Plate, cassettdel	Board, cassette unit

KONTAKTER
CONNECTORS

9	995818-SM 240C	Kontakt, 2-polet, liten	Connector, 2 pole, small
	995819-SM 240C	Kontakt, 3-polet, liten	Connector, 3 pole, small
	995821-SM 240C	Kontakt, 5-polet, liten	Connector, 5 pole, small
	995823-SM 240C	Kontakt, 7-polet, liten	Connector, 7 pole, small
10	995081-SM 240C	Kontakt, 2-polet, liten	Connector, 2 pole, small
	995082-SM 240C	Kontakt, 5-polet, liten	Connector, 5 pole, small
11	995083-SM 240C	Kontakt, 7-polet, liten	Connector, 7 pole, small
12	995086-SM 240C	Kontakt, 3-polet	Connector, fixed, 3 pole
13	995825-SM 240C	Kontakt, 3-polet, stor	Connector, 3 pole, large
	995084-SM 240C	Kontakt, 7-polet, stor	Connector, 7 pole, large
	995085-SM 240C	Kontakt, 9-polet, stor	Connector, 9 pole, large
14	995827-SM 240C	Kontakt, 2-polet, sort	Connector, 2 pole, black
15	341237-SM 240C	Kontakt, 5-polet	Connector, fixed, 5 pole
	307100-SM 240C	Kontakt, 8-polet	Connector, fixed, 8 pole
	342918-SM 240C	Kontakt, 9-polet	Connector, fixed, 9 pole
16	350991-SM 240C	Plint, tilkopling, 9-polet	Connector, fixed, 9 pole
	350912-SM 240C	Plint, tilkopling, 13-polet	Connector, fixed, 13 pole

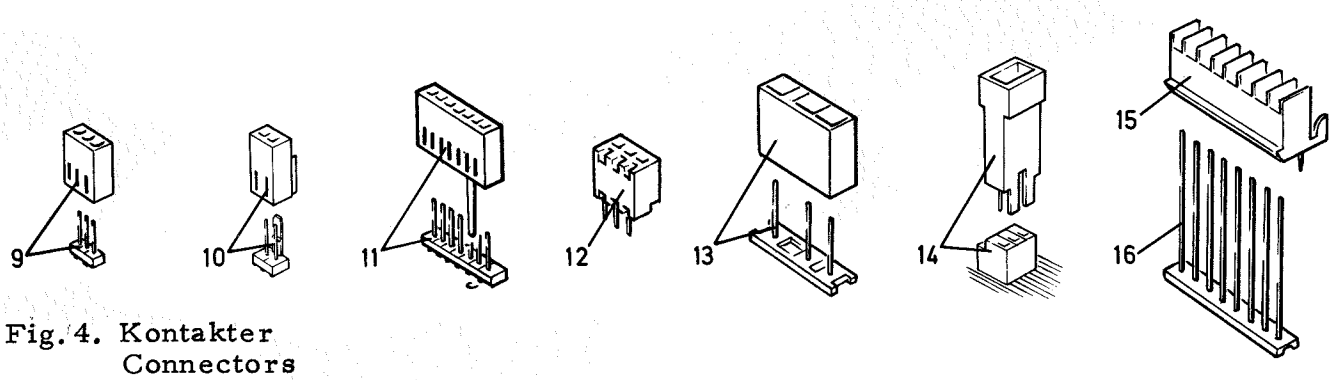

Fig. 4. Kontakter
Connectors

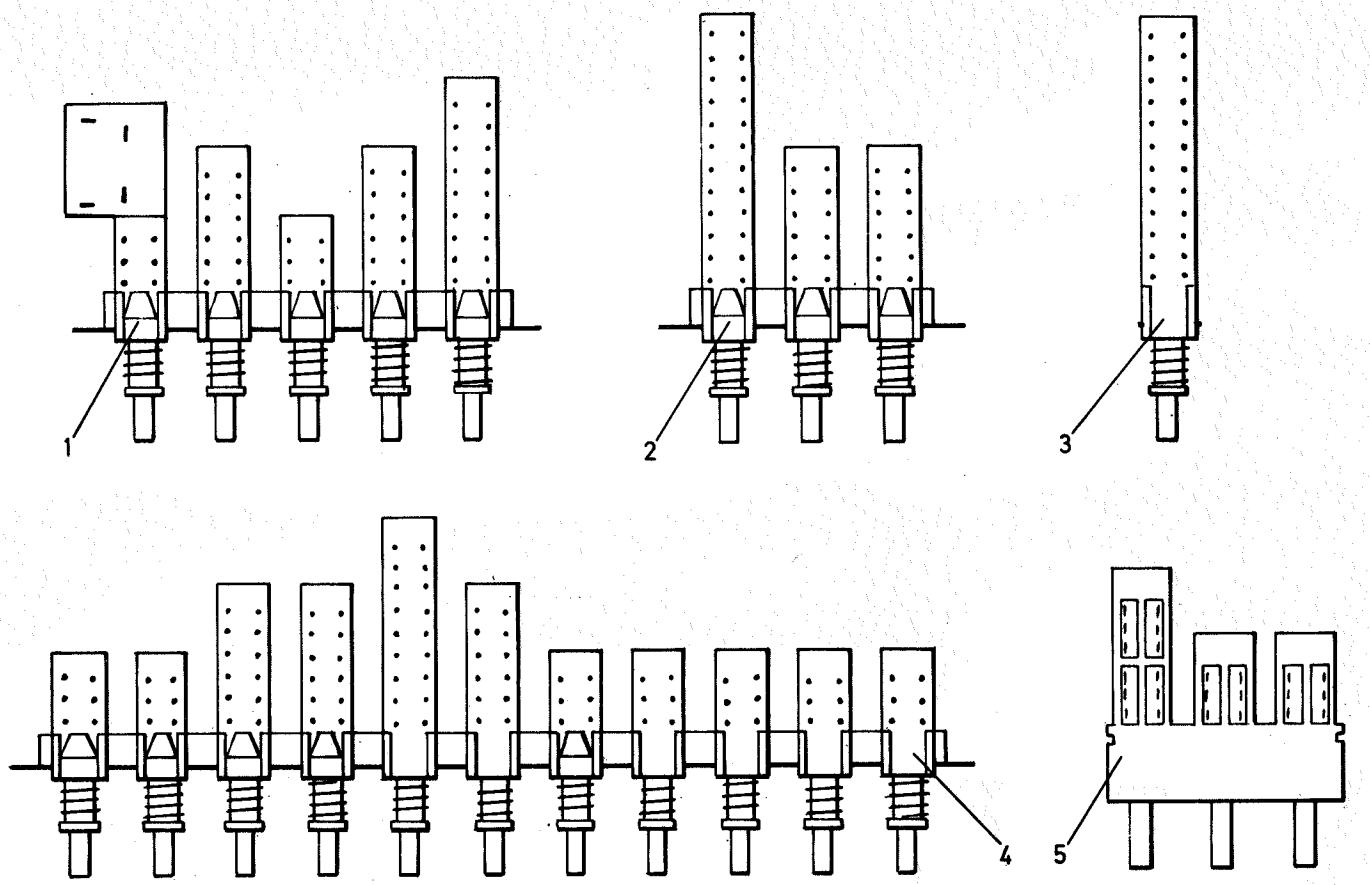

Fig. 5. Vendere
Switches

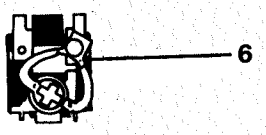

VENDERE
SWITCHES

	Oppgi bestillingsnummer og beskrivelse ved bestilling State order number and description when ordering		
Ref. nr	Best. nr/Order no	Beskrivelse	Description
1.	340410-SM 240C	Vender, nett/høyttaler	Switch, power/speakers
	950213-SM 240C	Nettbryter, del av 340410	Mains switch, section of 340410
2.	319685-SM 240C	Vender, kass. front	Switch, cass. front
3.	318004-SM 240C	Vender, inn/avspilling	Switch, record/play
4.	341322-SM 240C	Vender, hovedtastatur	Switch, main push-button
5.	343355-SM 240C	Vender, radio	Switch, radio
6.	330726-SM 240C	Vender, AGC	Switch, AGC

EMBALLASJE - TILBEHØR
PACKING - ACCESSORIES

Oppgi dette ved bestilling Specify this when ordering	
Best. nr/Order no	Beskrivelse/Description
345747-SM 240C	Eske /Box
291518-SM 240C	Plastfolie /Plastic foil
347859-SM 240C	Isoporinnlegg /Polystyrene packing
950228-SM 240C	Antenneledning /Antenna wire
347744-SM 240C	Kassett, C-60 /Cassette

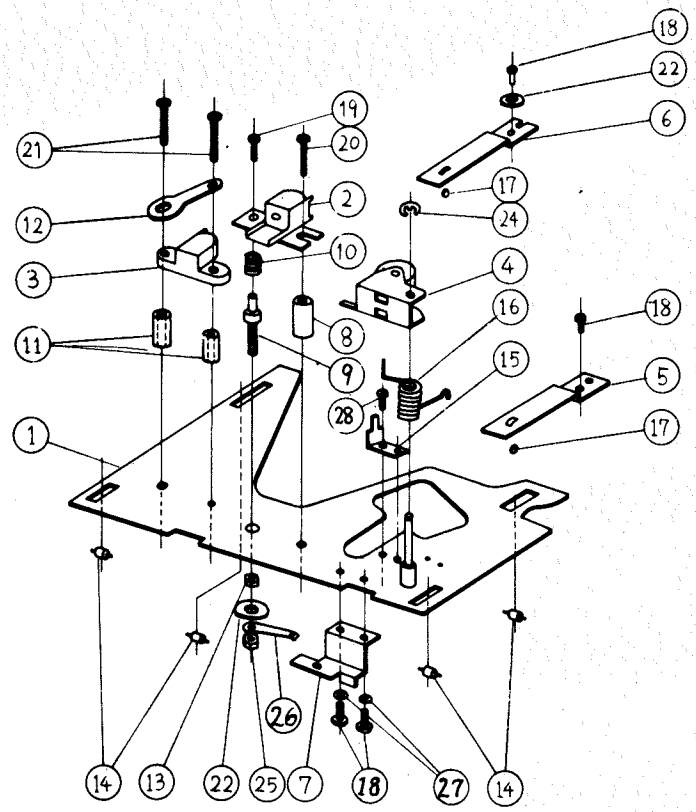

Fig. 6. Mekaniske deler, kassettverk, Liste, se neste side.
Mechanical parts, cassette mechanism, parts list overleaf

Fig. 7. Mekaniske deler, kassettverk, Liste, se neste side
Mechanical parts, cassette mechanism, parts list overleaf

Mekaniske deler, drivverk For the corresponding parts list in English see back page.

Pos.nr.	Beskrivelse	Vare nr.
1	Lydhodeplate	762701
2	Lydhode	305138
3	Viskehode	762703
4	Trykkvalsarm kompl.	762704
5	Høyre fjær for lydhodeplate	762705
6	Venstre fjær for lydhodeplate	762706
7	Vinkel for lydhodeplate	762707
8	Avstandstykke for lydhode	762708
9	Justeringsstykke for lydhode	762709
10	Justeringsfjær for lydhode	762710
11	Avstandsstykke for viskehode	762711
12	Loddeøre	762712
13	Spesialmutter	762713
14	Rulle for lydhodeplate	762714
15	Stoppvinkel for trykkvalsarm	762715
16	Trykkvalsfjær	762716
17	Stålkule	762717
18	Mask.skrue M 2,6x4 pan pos	762718
19	Mask.skrue M 2,6x8 pan pos	762719
20	Mask.skrue M 2x12 pan pos	762720
21	Mask.skrue M 2x14 pan pos	762721
22	Jernskive	762722
23	Mutter M 2,6	762723
24	Sikringsring Ø 2 mm	762724
25	Mutter M 2,6	762725
26	Fjærplate	762726
27	Sprengskive Ø 2,6	324211
28	Mask.skrue M 2x3 pan pos	322932
31	Chassis	762731
32	Tastatur m/knapper	950264
33	Høyre sidebrakett	762733
34	Sleideplate	762734
35	Trekkmagnet	762735
36	Vippearm	762736
37	Styring	762737
38	Låseplate	762738
39	Fjær for magnet	762739
40	Opptaksarm	322630
43	Ledningsklemme	762743
44	Plastikstrømpe, sort Ø 4x20 mm	762744
45	Kassett-holder	762745
46	Høyre fjær for kassettholder	762746
47	Venstre fjær for kassettholder	762747
48	Bremsearm	762748
49	Fjær for bremsearm	762749
50	Avløpende spoletallerken	762750
51	Opptakssperre	762751
52	Lager for opptakssperre	762752
53	Telleverk	762753
54	Telleverksbrakett	762754
55	Venstre sidebrakett	762755
56	Sikringsring 3 mm	324053
57	Fjær for låseplate	762757
58	Aksel for opptaksarm	762758
59	Mask.skrue M 2,6x6 pan pos	762759
61	Mask.skrue M 3x4 pan pos	762761
62	Mask.skrue M 3x6 pan pos	762762
63	Mutter M 2,6	762725
64	Mutter M 2	936030
65	Sikringsring 2 mm	762724
66	Sikringsring 1,5 mm	936614
67	Fjærfeste	762767
68	Fjær for pausearm	762768
69	Kassettstyring	762769
70	Sprengskive 2,6 mm	762770
71	Telleverkshjul	762771
72	Avstandsskive	762772
73	Fjær for avløpende spole	762773
74	Påløpende spole	762774
75	Nylonskive	762775

Pos.nr	Beskrivelse	Vare nr.
79	Aksel for bremsearm	762779
80	Mask.skrue M 2,6x3 pan pos	762780
81	Svinghjul	762781
82	Låseplate	762782
83	Svinghjulslager	762783
84	Motor komplett	762784
85	Motorbrakett	762785
86	Opptrekksenhet	762786
87	Fjær for opptrekksarm	762787
88	Svinghjulsholder	762788
91	Remskive for telleverk	762791
92	Opptakslås	762792
93	Lager for opptakslås	762793
94	Tilbakespolingsarm	762794
95	Fjær for opptakslås	762795
96	Fjær for fremspolingslås	762796
97	Fjær for tastatur og tilbakespoling	762797
98	Bremsesleide	762798
99	Fjær for fremspolingsarm	762799
100	Fremspolingsarm	762800
101	Koplingsfjær for fremspolingsarm	762801
103	Telleverksrem	762803
104	Fremspolingslås	762804
105	Aksel for fremspolingslås	762805
106	Stopper (kun på enkelte chassis)	762806
107	Pausearm	762807
108	Låsearm	762808
109	Låsefjær	762809
110	Vriarm	762810
111	Styregaffel	762811
113	Fjærbrakett	762813
114	Fjær for lydhodeplate	762814
115	Drivrem	762815
116	Hovedbryter	762816
117	Stang for opptakssperre	762817
118	Skive	762818
123	Mask.skrue M 2x6 pan pos	762823
127	Lagerskive	762827
129	Fotocelleenhet	323608
130	Mask.skrue M 2,6x10 pan pos	762830
131	Mask.skrue M 2,6x6 pan pos	762831
132	Sprengskive 2 mm	230247
133	Knapp tastatur (nedre)	762832
134	Knapp tastatur, limt (øvre)	333542
135	Aksel venstre spoletallerken	762836
136	Lager høyre spoletallerken	762837
137	Vinkel	332141
138	Skrue 2,6x4 mm	214270
139	Skrue ¼ " - 6	309060
140	Skjerm, aluminium	337164
141	Skiver	323076
142	Skrue 2,6x6 mm	762759
143	Holder, plast	342127
144	Skrue 3x4 mm	206842
145	Microbryter, pause	321775
146	Skrue 3/8" - 2	241633
147	Skrue 3/8" - 4	234931
148	Skive	323076
149	Aksel, plast	319987
150	Arm, plast	318306
151	Mutter	322444
152	E.ring 3 mm	324053
153	Aksel, stål	320949
154	Arm, stål	322630
155	Skrue 5/16" - 4	305900
156	Skrue 5/8" - 6	327486
157	Kjøleplate	316273
158	Bøyle, transistorfeste	342803
159	Vinkel	330001
160	Skrue 2,6x8 mm	275225

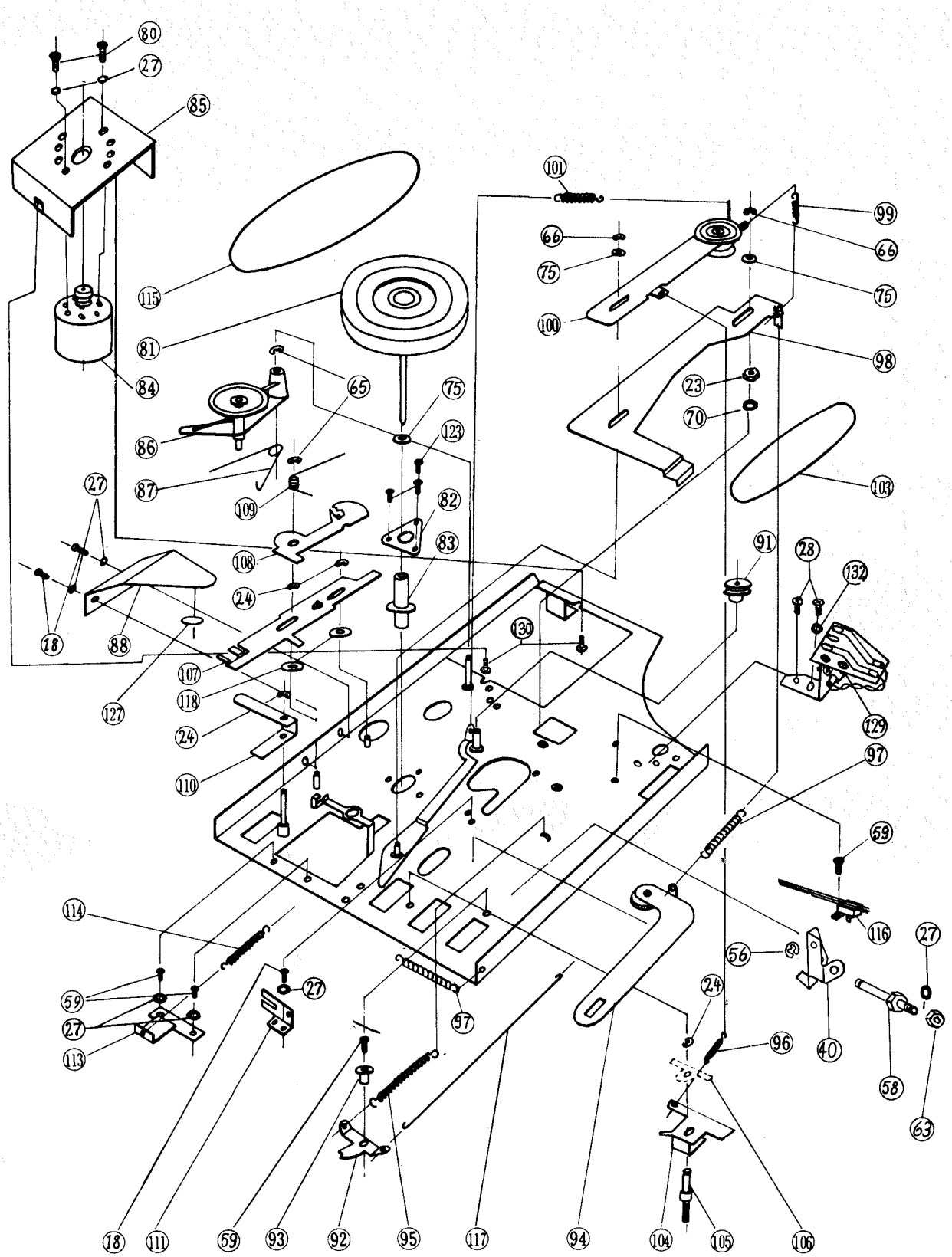

Fig. 8. Mekaniske deler, kassettverk
Mechanical parts, cassette mechanism

ELEKTRISKE DELER
ELECTRICAL PARTS

TRANSISTORER
TRANSISTORS

Ref. nr	Oppgi dette ved bestilling Specify this when ordering Best. nr/Order no	Type/Erstatningstype(Alternative)
Q1	282925-SM 240C	40822
Q3	324756-SM 240C	TIS88A/UE 1994E
Q4	243831-SM 240C	BF194 /BF 494
Q5	243831-SM 240C	BF194 /BF494
Q6	243831-SM 240C	BF194 /BF494
Q40	230291-SM 240C	BC147B /BC547B
Q100	230271-SM 240C	BC147B /BC547B
Q150	342579-SM 240C	BC489B
Q151	231261-SM 240C	BC148C /BC548C
Q152	261776-SM 240C	2N 5496
Q200	246483-SM 240C	BC149C /BC549C
Q201	281158-SM 240C	BC159A/B /BC559A/B
Q220	231771-SM 240C	BC147A /BC547A
Q240	230291-SM 240C	BC147B /BC547B
Q241	246483-SM 240C	BC149C /BC549C
Q260	230291-SM 240C	BC147B /BC547B
Q261	230291-SM 240C	BC147B /BC547B
Q262	344167-SM 240C	BC490B
Q263	342579-SM 240C	BC489B
Q264	307494-SM 240C	BC238
Q265	232719-SM 240C	BC148B /BC548B
Q266	274599-SM 240C	BC158A /BC558A
Q267	324887-SM 240C	X41D217
Q268	323206-SM240C	X40D216
Q269	332853-SM 240C	M607
Q270	334534-SM 240C	M608
Q300	246483-SM 240C	BC149C /BC549C
Q301	281158-SM 240C	BC159A/B /BC559A/B
Q320	231771-SM 240C	BC147A /BC547A
Q340	230291-SM 240C	BC147B /BC547B
Q341	246483-SM 240C	BC149C /BC549C
Q360	230291-SM 240C	BC147B /BC547B
Q361	230291-SM 240C	BC147B /BC547B
Q362	344167-SM 240C	BC490B
Q363	342579-SM 240C	BC489B
Q364	307494-SM 240C	BC238
Q365	232719-SM 240C	BC148B /BC548B
Q366	274599-SM 240C	BC158A /BC558A
Q367	324887-SM 240C	X41D217
Q368	323206-SM 240C	X40D216
Q369	332853-SM 240C	M607
Q370	334534-SM 240C	M608
Q401	246483-SM 240C	BC149C /BC549C
Q402	246483-SM 240C	BC149C /BC549C
Q403	246483-SM 240C	BC149C /BC549C
Q404	246483-SM 240C	BC149C /BC549C
Q405	246483-SM 240C	BC149C /BC549C
Q501	246483-SM 240C	BC149C /BC549C
Q502	246483-SM 240C	BC149C /BC549C
Q503	246483-SM 240C	BC149C /BC549C
Q504	246483-SM 240C	BC149C /BC549C
Q505	246483-SM 240C	BC149C /BC549C
Q603	246483-SM 240C	BC149C /BC549C
Q604	261776-SM 240C	2N5496
Q605	246483-SM 240C	BC149C /BC549C
Q606	246483-SM 240C	BC149C /BC549C
Q607	333751-SM 240C	BD697A
Q701	246483-SM 240C	BC149C /BC549C
Q702	246483-SM 240C	BC149C /BC549C
Q801	246483-SM 240C	BC149C /BC549C
Q802	264881-SM 240C	2N5462
Q803	264881-SM 240C	2N5462
Q901	230291-SM 240C	BC147B /BC547B
Q902	230291-SM 240C	BC147B /BC547B
Q903	230291-SM 240C	BC147B /BC547B
Q904	230291-SM 240C	BC147B /BC547B
Q905	230291-SM 240C	BC147B /BC547B
Q906	230291-SM 240C	BC147B /BC547B
Motor	762835-SM 240 C	2S A564
Motor	762838-SM 240 C	2S C1162

DIODER
DIODES

Ref. nr	Oppgi dette ved bestilling Specify this when ordering	
	Best. nr/Order no	Beskrivelse/Description
D1	266339-SM 240C	BB103
D2	266339-SM 240C	BB103
D3	266339-SM 240C	BB103
D4	213948-SM 240C	BA124
D5	205068-SM 240C	2AA119
D6	205068-SM 240C	2AA119
AM-FM-skala	332307-SM 240C	RL-54 Lysemitterende/Light emitting
CR7	247007-SM 240C	1N4148
CR12E	205068-SM 240C	2AA119
CR 64	248092-SM 240C	BYX 10
CR153	266835-SM 240C	1N4742A Zener 12V
CR154	286058-SM 240C	1N4004
CR155	286058-SM 240C	1N4004
CR201	247007-SM 240C	1N4148
CR202	247007-SM 240C	1N4148
CR203	247007-SM 240C	1N4148
CR260	247007-SM 240C	1N4148
CR261	247007-SM 240C	1N4148
CR262	247007-SM 240C	1N4148
CR270	247007-SM 240C	1N4148
CR272	247007-SM 240C	1N4148
CR275	205068-SM 240C	2AA119
CR276	247007-SM 240C	1N4148
CR301	247007-SM 240C	1N4148
CR302	247007-SM 240C	1N4148
CR303	247007-SM 240C	1N4148
CR360	247007-SM 240C	1N4148
CR361	247007-SM 240C	1N4148
CR362	247007-SM 240C	1N4148
CR370	247007-SM 240C	1N4148
CR372	247007-SM 240C	1N4148
CR375E	205068-SM 240C	2AA119
CR376	247007-SM 240C	1N4148
CR401A	289851-SM 240C	BA219
CR402A	289851-SM 240C	BA219
CR501A	289851-SM 240C	BA219
CR502A	289851-SM 240C	BA219
CR601A	274678-SM 240C	1N5243B 13V
CR602A	247007-SM 240C	1N4148
CR603A	247007-SM 240C	1N4148
CR604	248092-SM 240C	BYX10
CR650A	247007-SM 240C	1N4148
CR801A	247007-SM 240C	1N4148
CR802A	247007-SM 240C	1N4148
CR803A	247007-SM 240C	1N4148
CR901	247007-SM 240C	1N4148

INTEGRERTE KRETSER
INTEGRATED CIRCUITS

Ref. nr	Oppgi dette ved bestilling Specify this when ordering	
	Best. nr/Order no	Beskrivelse/Description
U1	296898-SM 240C	CA3089E
U2	328729-SM 240C	TCA440
U3	293594-SM 240C	MC1310P

KERAMISKE FILTRE
CERAMIC FILTERS

Ref. nr	Oppgi dette ved bestilling Specify this when ordering	
	Best. nr/Order no	Beskrivelse/Description
FC1	322537-SM 240C	Filter 10,7 MHz
FC2	322537-SM 240C	Filter 10,7 MHz
FC3	328772-SM 240C	Filter 455 kHz

LIKERETTER
RECTIFIER

Ref. nr	Oppgi dette ved bestilling Specify this when ordering	
	Best. nr/Order no	Beskrivelse/Description
D1	283306-SM 240C	B40-C3200/2200

SIKRINGER
FUSES

Ref. nr	Oppgi dette ved bestilling Specify this when ordering	
	Best. nr/Order no	Beskrivelse/Description
S1	282846-SM 240C	500 mA, Treg/Slow, 5x20 mm
S2	291151-SM 240C	3,15 A, Treg/Slow, 5x20 mm

LAMPER
BULBS

Oppgi dette ved bestilling Specify this when ordering	
Best. nr/Order no	Beskrivelse/Description
284471A-SM 240C	Lampe, front, 14V-80 mA med ledning Bulb, front, 14V-80 mA with leads
341316-SM 240C	Lampe, skala, 12-15V, 1 W Bulb, dial, 12-15V, 1 W
551604-SM 240C	Lampe, instrument 12-15V, 30 mA Bulb, meter 12-15V, 30 mA

SPOLER
COILS

Ref. nr	Oppgi dette ved bestilling Specify this when ordering Best. nr/Order no	Beskrivelse/Description
L5	980153-SM 240C	MF-FM prim. /IF-FM Primary
L6	980154-SM 240C	MF-FM sek. /IF-FM Secondary
L11	980192-SM 240C	FM Detektor
L12	283846-SM 240C	EL0810 SK-150K w/kinked lead
L101	980184-SM 240C	MB-inng. /MW input
L102	980185-SM 240C	LB-inng. /LW input
L103	980186-SM 240C	Osc. AM
L104	980187-SM 240C	MF-sperre/IF trap
L106	980189-SM 240C	MF primærkrets/IF primary circuit
L107	980190-SM 240C	MF sekundærkrets/IF secondary circuit
L108	980191-SM 240C	AM detektor
L150	283846-SM 240C	EL0810 SK-150K w/kinked lead
L200	980104-SM 240C	Drossel/Choke coil
L300	980104-SM 240C	Drossel/Choke coil
L401	980168-SM 240C	Korreksjon nr. 7775A/Correction coil no.7775A
L501	980168-SM 240C	Korreksjon nr. 7775A/Correction coil no.7775A
L701	980142-SM 240C	Osc. trafo/Osc. transformer

POTENSIOMETERE
POTENTIOMETERS

Ref. nr	Oppgi dette ved bestilling Specify this when ordering Best. nr/Order no	Beskrivelse/Description
R451	319175-SM 240C	100 kΩ, FM-preset, P1
R452	319175-SM 240C	100 kΩ, FM-preset, P2
R453	319175-SM 240C	100 kΩ, FM-preset, P3
R454	319175-SM 240C	100 kΩ, FM-preset, P4
R455	262703-SM 240C	10 kΩ, Varicap spenning/Varicap voltage
R456	273106-SM 240C	100 kΩ, FM-skala/FM-dial
R457	264384-SM 240C	50 kΩ, FM signalstyrke/FMsignal strength
R458	264384-SM 240C	50 kΩ, Mono-stereo switch
R459	273106-SM 240C	100 kΩ, Kanalseparasjon/Channel sep.
R460	289248-SM 240C	5 kΩ, 19 kHz filter
R461	263055-SM 240C	1 kΩ, Spenningsreg. /Voltage reg.
R462	262703-SM 240C	10 kΩ, AFC
R463	260670-SM 240C	2, 5 kΩ, AM-signalstyrke/AM-signal strength
R470	341524-SM 240C	47 kΩ, Lydstyrke/Volume
R471	327048-SM 240C	22 kΩ, Bass
R472	327048-SM 240C	22 kΩ, Diskant/Treble
R473	284556-SM 240C	100 Ω, Hvilestrøm/Quiescent current
R474	261022-SM 240C	5 kΩ, Utgangsmeter/Outputmeter
R480	341524-SM 240C	47 kΩ, Lydstyrke/Volume
R481	327048-SM 240C	22 kΩ, Bass
R482	327048-SM 240C	22 kΩ, Diskant/Treble
R483	284556-SM 240C	100 Ω, Hvilestrøm/Quiescent current
R484	261022-SM 240C	5 kΩ, Utgangsmeter/Outputmeter
R492	262703-SM 240C	10 kΩ, AM-LF nivå/AM-AF level
R501	260002-SM 240C	250 kΩ
R701	264384-SM 240C	50 kΩ, Bias reg.
R801	260002-SM 240C	250 kΩ, DNF-nivå/DNF level

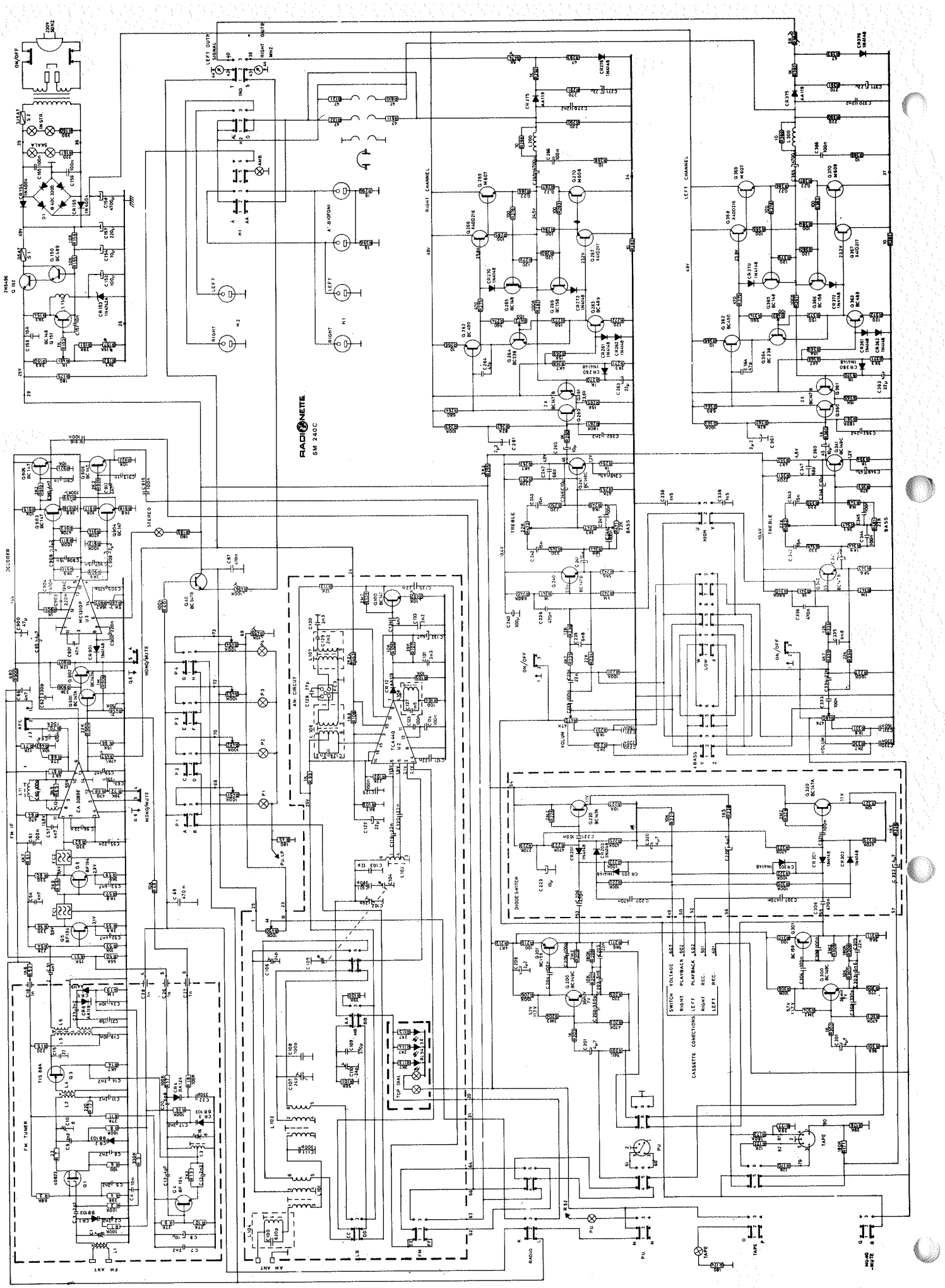

Fig. 9. Skjema, radio og forsterkerdel.
Circuit diagram, radio and amplifier section.

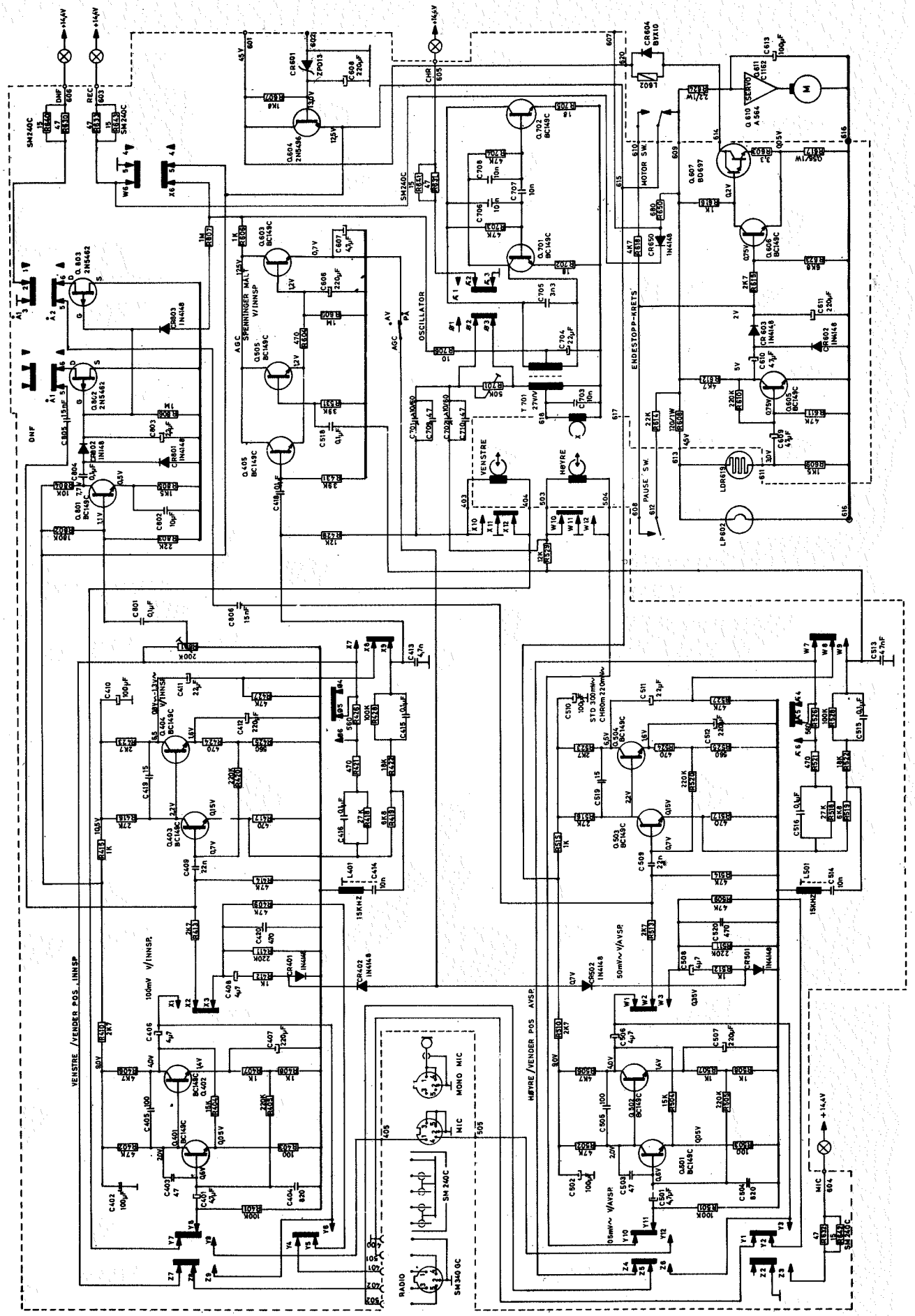

Fig. 10. Skjema kassettdel
Circuit diagram, cassette section

Mechanical parts, drive mechanism

References, see figs. 6, 7 and 8.

Pos.No	Description	Parts No
1	Sound head plate	762701
2	Sound head	305138
3	Erase head	762703
4	Pressure roller arm, complete	762704
5	Right spring for sound head plate	762705
6	Left spring for sound head plate	762706
7	Angle bracket for head plate	762707
8	Spacer for sound head	762708
9	Adjustable spacer for sound head	762709
10	Adjusting spring for sound head	762710
11	Spacer for erasure head	762711
12	Soldering tag	762712
13	Special nut	762713
14	Roller for sound head plate	762714
15	Stop bracket for pressure arm	762715
16	Pressure roller spring	762716
17	Steel ball	762717
18	Machine screw M 2.6x4 pan pos	762718
19	Machine screw M 2.6x8 pan pos	762719
20	Machine screw M 2x12 pan pos	762720
21	Machine screw M 2x14 pan pos	762721
22	Metal washer	762722
23	Nut M 2.6	762723
24	Locking ring, 2 mm	762724
25	Nut M 2.6	762725
26	Spring plate	762726
27	Bearing washer 2.6	324211
28	Machine screw M 2x3 pan pos	322932
31	Chassis	762731
32	Push button unit, with buttons	950264
33	Right hand side bracket	762733
34	Slide plate	762734
35	Solenoid	762735
36	Rocker arm	762736
37	Control	762737
38	Locking plate	762738
39	Spring for magnet	762739
40	Winding arm	322630
43	Cable clip	762743
44	Plastic sleeve, black, 4x20 mm	762744
45	Cassette holder	762745
46	Right hand spring for cassette hold.	762746
47	Left hand spring for cassette holder	762747
48	Brake arm	762748
49	Spring for brake arm	762749
50	Supply turntable	762750
51	Erase prevention arm	762751
52	Bearing for erase prev.mechan.	762752
53	Tape counter	762753
54	Tape counter bracket	762754
55	Left hand side bracket	762755
56	Circlip 3 mm	324053
57	Spring for locking plate	762757
58	Axle for winding arm	762758
59	Machine screw M 2.6x6 pan pos	762759
61	Machine screw M 3x4 pan pos	762761
62	Machine screw M 3x6 pan pos	762762
63	Nut M 2.6	762725
64	Nut M 2	936030
65	Locking ring, 2 mm	762724
66	Locking ring 1.5 mm	936614
67	Spring bracket	762767
68	Spring for pause arm	762768
69	Cassette control	762769
70	Washer 2.6 mm	762770
71	Tape counter wheel	762771
72	Spacer washer	762772
73	Spring for supply turntable	762773
74	Take-up turntable	762774
75	Nylon washer	762775

Pos.No	Description	Parts No
79	Axle for brake arm	762779
80	Machine screw M 2.6x3 pan pos	762780
81	Flywheel	762781
82	Locking plate	762782
83	Flywheel bearing	762783
84	Motor complete	762784
85	Motor bracket	762785
86	Winding unit	762786
87	Spring for winding arm	762787
88	Flywheel holder	762788
91	Belt pulley for tape counter	762791
92	Take-up lock	762792
93	Bearing for record lock	762793
94	Rewind arm	762794
95	Spring for record lock	762795
96	Spring for winding lock	762796
97	Spring for push-button and rewinding	762797
98	Brake slide	762798
99	Spring for winding arm	762799
100	Forward winding arm	762800
101	Connecting spring for forward winding arm	762801
103	Tape counter belt	762803
104	Forward winding lock	762804
105	Axle for forward winding lock	762805
106	Stopper	762806
107	Pause arm	762807
108	Locking arm	762808
109	Locking spring	762809
110	Torsion arm	762810
111	Control fork	762811
113	Spring bracket	762813
114	Spring for sound head plate	762814
115	Drive belt	762815
116	Main switch	762816
117	Rod for recording lock	762817
118	Washer	762818
123	Machine screw M 2x6 pan pos	762823
127	Bearing washer	762827
129	Photo cell unit	323608
130	Machine screw M 2.6x10 pan pos	762830
131	Machine screw M 2.6x6 pan pos	762831
132	Bearing washer 2 mm	230247
133	Push button (lower)	762832
134	Cover for push button, glued (upper)	333542
135	Axle for left turntable	762836
136	Bearing for right turntable	762837
137	Angle bracket	332141
138	Screw 2.6x4 mm	214270
139	Screw ¼" - 6	309060
140	Shield plate, aluminium	337164
141	Washers	323076
142	Screw 2.6x6 mm	762759
143	Holder, plastic	342127
144	Screw 3x4 mm	206842
145	Micro switch, pause	321775
146	Screw 3/8" - 2	241633
147	Screw 3/8" - 4	234931
148	Washer	323076
149	Axle, plastic	319987
150	Arm, plastic	318306
151	Nut	322444
152	E.ring 3 mm	324053
153	Axle, steel	320949
154	Arm, steel	322630
155	Screw 5/16" - 4	305900
156	Screw 5/8" - 6	327486
157	Heat sink plate	316273
158	Bracket, transistor fixing	342803
159	Angle bracket	330001
160	Screw 2.6x8 mm	275225

RADIONETTE

1301 SANDVIKA, NORGE

Telefon 544860 (02)
Telex 18007 Kurer N

Generalagenter i Norden:

Radionette AB
St. Göransgatan 84
10028 Stockholm
Sverige

Tandberg Radio A/S
Brandstrupsvej 10,
2610 Rødovre
Danmark

OY Tandberg Radio AB
Atomitie 5
Helsinki 37
Finland

Printed in Norway Tøyen Trykk A/S

0576163